GUILD ◆ EDITION

Woodsmith®

Woodsmith.com

Vol. 39 / No. 230

MODULAR SHOP STORAGE SOLUTION

- Lightweight Construction
- Sturdy & Stackable
- Go-Anywhere Design

Inside:

Improve Accuracy at the Table Saw

Rout Your Way to Better Joints

10 Must-Have Tools for Your Shop

Tools, Tips & Techniques to Become a Better Woodworker

A Publication of Cruz Bay Publishing, Inc.

Woodsmith®

CREATIVE HOME GROUP
GENERAL MANAGER Donald B. Peschke
EDITORIAL MEDIA DIRECTOR Bryan Nelson
MANAGING EDITOR Vincent Ancona
SENIOR EDITORS Wyatt Myers, Phil Huber
ASSOCIATE EDITOR Robert Kemp
ASSISTANT EDITOR Erich Lage

EXECUTIVE ART DIRECTOR Todd Lambirth
SENIOR ILLUSTRATORS Harlan V. Clark, Dirk Ver Steeg, Peter J. Larson
SENIOR GRAPHIC DESIGNER Bob Zimmerman
GRAPHIC DESIGNER Becky Kralicek

CREATIVE DIRECTOR Ted Kralicek
ASSISTANT DESIGN DIRECTOR Chris Fitch
PROJECT DESIGNER/BUILDER John Doyle
CAD SPECIALIST Steve Johnson
SHOP CRAFTSMAN Dana Myers

SENIOR PHOTOGRAPHERS Crayola England, Dennis Kennedy
ASSOCIATE STYLE DIRECTOR Rebecca Cunningham
SENIOR ELECTRONIC IMAGE SPECIALIST Allan Ruhnke
PRODUCTION ASSISTANT Minniette Johnson
VIDEO EDITOR/DIRECTOR Mark Hayes

Woodsmith® (ISSN 0164-4114) is published bimonthly by Cruz Bay Publishing, Inc., 5720 Flatiron Parkway, Boulder, CO 80301.
Woodsmith® is a registered trademark of Cruz Bay Publishing.
Copyright© 2017 Cruz Bay Publishing, Inc. All rights reserved.
Subscriptions: Single copy: $6.95.
Canadian Subscriptions: Canada Post Agreement No. 40038201. Send change of address information to PO Box 881, Station Main, Markham, ON L3P 8M6. Canada BN 82564 2911
Periodicals Postage Paid at Des Moines, IA, and at additional offices.
Postmaster: Send change of address to *Woodsmith*, Box 37106, Boone, IA 50037-0106.
Printed in U.S.A.

WoodsmithCustomerService.com

ONLINE SUBSCRIBER SERVICES
- **VIEW** your account information
- **RENEW** your subscription
- **CHECK** on a subscription payment
- **PAY** your bill
- **CHANGE** your mailing or e-mail address
- **VIEW/RENEW** your gift subscriptions
- **TELL US** if you've missed an issue

CUSTOMER SERVICE Phone: 800-333-5075 weekdays

SUBSCRIPTIONS
Customer Service
P.O. Box 842
Des Moines, IA 50304-9961
subscriptions@augusthome.com

EDITORIAL
Woodsmith Magazine
2200 Grand Avenue
Des Moines, IA 50312
woodsmith@woodsmith.com

ACTIVE INTEREST MEDIA

CHAIRMAN **Effrem Zimbalist III**
PRESIDENT & CEO **Andrew W. Clurman**
SENIOR VICE PRESIDENT, TREASURER & CFO **Michael Henry**
EXECUTIVE VICE PRESIDENT, OPERATIONS **Patricia B. Fox**

from the editor

Sawdust

Like many woodworkers, I enjoy building a wide range of projects. But my favorite are boxes. The small scale means you don't have to spend a lot on materials. In fact, for many of the boxes I build, the materials come from what I have left over from larger projects. The challenge with any box, though, is adding the right details to make it stand out.

For the small box featured in this issue (photo above and page 18), it's the scalloped lid that catches your eye. Don't worry, it doesn't mean you need to pick up a gouge and learn how to carve. The technique for creating the lid involves some clever work at the router table creating a series of coves in a solid-wood panel — no carving required. Of course, there's a little secret to turning that panel into the scalloped lid used on the box. But I'm not going to give that away here. You'll have to check out the article for those details.

Creating the scalloped look is one of those unique design elements that comes from vision, imagination, and years of experience. Ted Kralicek, our creative director, has those characteristics in abundance. In case you didn't know, Ted was the first person Don hired after starting *Woodsmith*, so he's been here for over 36 years designing and building many of the projects featured in these pages — the scalloped-lid box and the tall display cabinet in this issue were designed by Ted. And he built the box, too. I think it's fair to say he's had a hand in hundreds of projects over the years and built a fair amount of them.

So why all the high praise? Well, after contributing to this issue, Ted is retiring. He'll be moving on to enjoying more of life outside our shop. He'll be working around his house and cabin, enjoying both with his wife, Mindy. Plus, I hear he'll be doing a little fishing on the side.

Don't worry about the future of *Woodsmith* projects, though. We have a great design staff working on top-notch projects. Plus, Ted's promised to contribute a project from time to time. We're certainly happy for that, but mostly we're grateful for the many years of friendship. Thanks for everything, Ted. Enjoy your well-deserved retirement.

Bryan

contents

No. 230 April/May 2017

Projects

weekend project

Scalloped-Lid Box 18

Boxes are great projects, but it's the decorative, scalloped lid that sets this one apart. Hidden hardware allows it to open quickly and easily.

shop project

Shop-Made Brass Hammers 24

Brass stock is used to form the heads of these hammers. After a little custom detailing on the brass, add a shaped, solid-wood handle to perfectly fit your hand.

outdoor project

Garden Tower 28

This impressive garden piece is sure to capture attention no matter where it's displayed. Your attention will be drawn toward the angles and tapers that create its unique look.

shop project

Shop Storage Boxes 36

Common parts and construction are the key to creating any number of these shop storage boxes. They're handy for keeping a wide range of tools and supplies organized.

heirloom project

Tall Display Cabinet 44

The traditional design of this tall cabinet features beveled glass in the front and sides. Along with glass shelves, it ensures that what's stored inside will take center stage.

Departments

from our readers
Tips & Techniques 5

all about
Glues That Brave the Elements . . 10

router workshop
Better Joints with Loose Tenons . . 12

great gear
Hold-Downs for Accuracy 14

woodworking technique
Glue Blocks for Stronger Joints . . 16

working with tools
Circular Saws in the Shop 56

in the shop
Using Pre-Made Moldings 58

woodworking essentials
10 Tools Every Shop Needs. 60

mastering the table saw
Small Saws, Top-Notch Results . . 62

tips from our shop
Shop Notes. 64

from our readers

Tips & Techniques

Branding Iron Guide

I enjoy the projects that I build, and the custom branding iron that I purchased awhile back is a great way to personalize these finished pieces. But I've found it difficult to brand some projects in a discrete spot without the iron slipping or burning unevenly.

To solve this problem, I decided to create a simple guide that allows me to burn the brand onto a long, thin strip of wood. The strip fits into a slot in the base of the guide and is held in place by a toggle clamp, as shown in the photo. The branding iron is positioned by four pieces of ½" plywood that are sized and fashioned to trap the branding iron.

Operating it is simple. Once the brand is burned, I'll loosen the toggle and advance the strip until the brand shows outside of the guides (main photo). Then clamp the strip again and repeat. After cutting the brands free, you can glue or nail them to your finished projects.

David Corwin
Delaware, Ohio

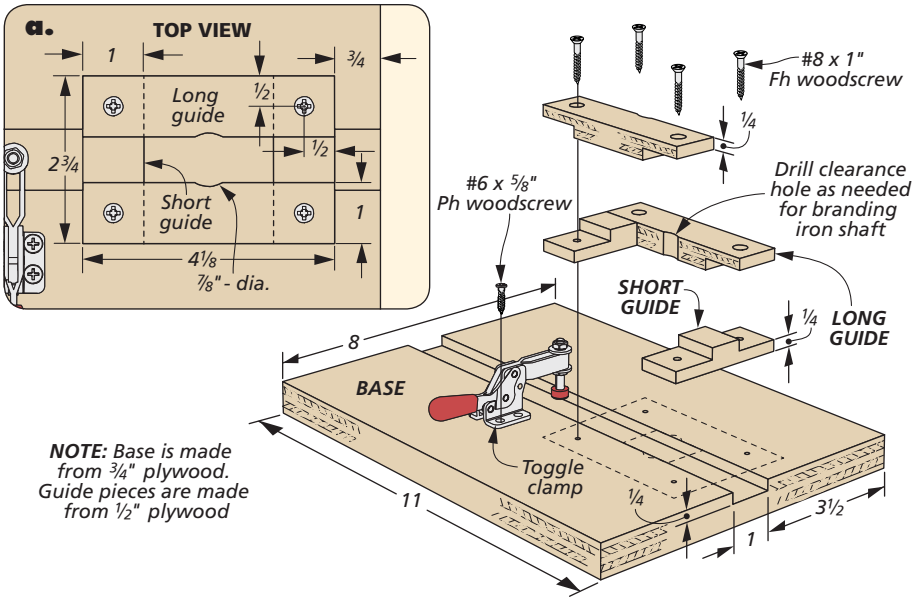

NOTE: *Base is made from ¾" plywood. Guide pieces are made from ½" plywood*

Win This Forrest Blade

Simply send us your favorite shop tips. If your tip or technique is selected as the featured reader's tip, you'll win a *Forrest Woodworker II* blade. To submit your tip or technique, go to *Woodsmith.com/magazine* and click on the link, "SUBMIT A TIP" at the bottom of the page. There you can upload your tips and photos for consideration.

The Winner!

Congratulations to Dan Martin, the winner of this *Forrest Woodworker II*. To find out how you can win this blade, check out the information at left.

Handy Band Saw Sled

When I get rolling on a project, my goal is to use each tool in the shop as efficiently as possible. My table saw will be set up for certain procedures, both the routers have bits tuned to a task at hand, and the drill press will have marching orders, too.

I decided to enlist my band saw into the project production line. One good way to do this is to make a sturdy crosscut sled, similar to the one that you might use on a table saw. It's nothing more than a plywood base with a hardwood fence. As the detail below shows, the hardwood runner is slightly longer than the base. Making the runner longer adds stability when using the sled.

With this sled and a sharp blade, I can quickly crosscut smaller project parts and pieces without having to change the setup on my table saw.

Phil Huber
Urbandale, Iowa

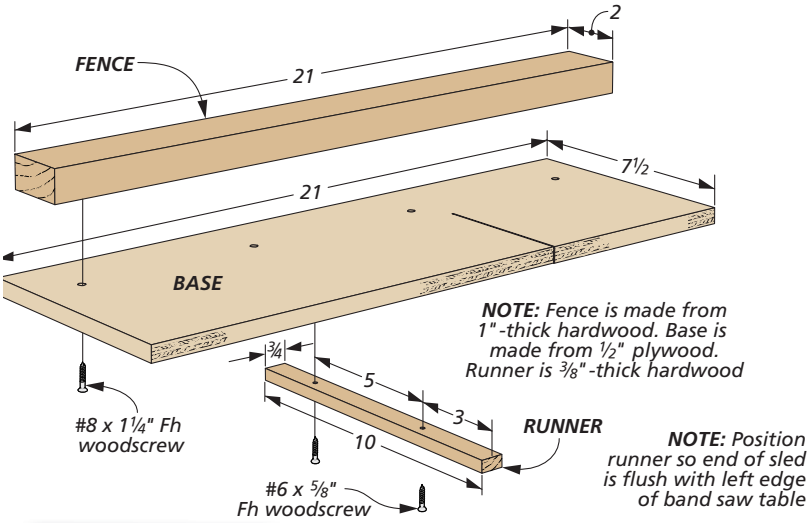

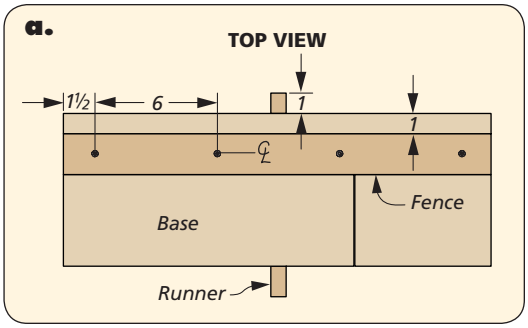

QUICK TIPS

Stain History. *Becky Kralicek* of *Des Moines, IA,* found a permanent solution for remembering the finishing details on her projects. She records the information in a hidden place, such as the underside of a drawer. This removes future guesswork when matching stains.

Chisel Scraper. *Thomas Roessler* of *Appleton, WI*, put an old chisel that'd been lying around his shop to good use. After sharpening it, he put a burr on it with a steel rod in the same manner as his scrapers. This created a "mini-scraper" for fine-tuning joinery and fitting into corners.

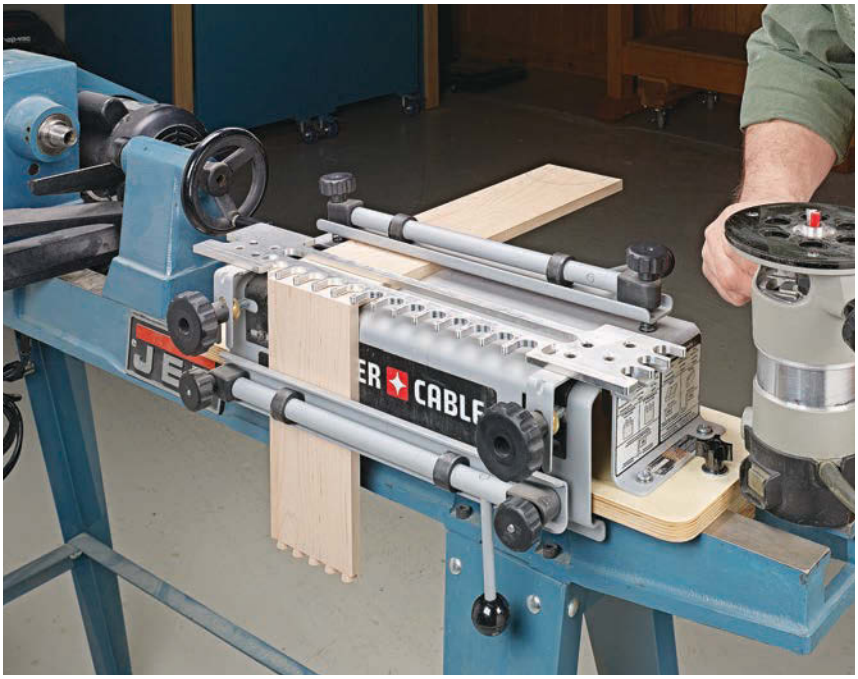

▲ The dovetail jig is fastened to a plywood base. The base is then secured to the lathe with the bed filler, cleat, and hardware.

Space-Saving Tool Platform

My lathe and dovetail jig are tools that I don't use every day. But I would never dream of giving either one of them up. So, for the sake of shop space, I found a way to make double-duty use of the lathe footprint. All it took was a base for my dovetail jig that slips into the lathe bed.

I started with a plywood base that is slightly longer than my dovetail jig. Then, to secure it to the lathe, I made a bed filler and a cleat. For my setup, a ½" piece of plywood worked nicely as the bed filler (the piece that fits between the rails of the lathe bed). Your lathe bed opening might require a different thickness.

Last, as you can see in the upper right photo, the cleat ties it all to the bed of the tool rest. The drawing below shows the size of hardware I used to clamp it in place.

Thomas Lamb
Waupaca, Wisconsin

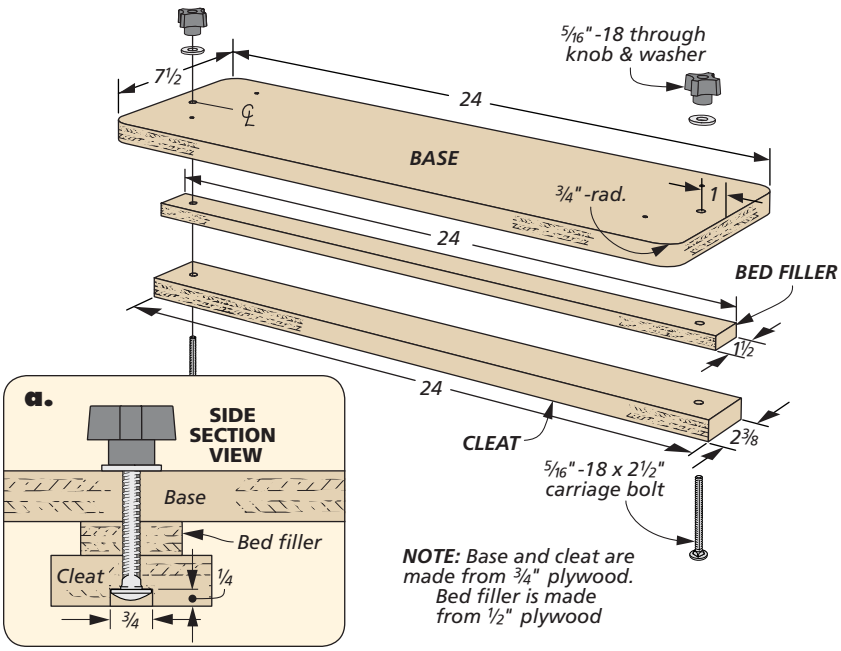

DIGITAL WOODSMITH

SUBMIT TIPS ONLINE

If you have an original shop tip, we would like to hear from you and consider publishing your tip in one or more of our publications. Jump online and go to:

SubmitWoodsmithTips.com

You'll be able to tell us all about your tip and upload your photos and drawings. You can also mail your tips to "Woodsmith Tips" at the editorial address shown on page 2. We will pay up to $200 if we publish your tip.

RECEIVE FREE ETIPS BY EMAIL

Now you can have the best time-saving secrets, solutions, and techniques sent directly to your email inbox. Just go to:

Woodsmith.com
and click on,
"Woodsmith eTips"

You'll receive one of our favorite tips by email each and every week.

With the sled assembled except for the fence. Attach a scrap of plywood to the base of the sled with double-sided tape.

At the table saw, make a pass through the front bridge and the plywood scrap. Now, pry off one of the scrap pieces.

Hassle-Free Crosscut Sled Setup

When making my crosscut sled, I was having problems squaring the sled fence to the blade of my table saw. Things kept shifting slightly when trying use my square to align the fence to the kerf that I cut in the sled base.

I found a simple solution for this. I attached a temporary plywood scrap to the sled with double-sided tape. Then I made the initial pass through the sled and scrap block. Doing this creates a solid reference point for a square to rest against.

The steps shown in the three photos give the details on how I went about this. The bigger the scrap, the better, as it will provide you with more surface to set your square against. To simplify the process, I attached one end of the fence loosely to the base before aligning it to the square. Once I was happy with the fence position, I screwed everything in place.

Jon Gonser
Grand Rapids, Michigan

Align a large square to the cut edge of the scrap. Then, position the fence against the square and tighten it to the base from underneath. To finish, pry the scrap alignment block from the base.

QUICK TIPS

Prevent Vise Racking. By drilling a hole in the ends of tongue depressors and then securing them with a long bolt, *Scott Johnson of Pacific Grove, CA,* created a self-adjusting helper for preventing vise rack. He lays the setup at the opposite end of the workpiece, and as he opens the vise, the appropriate number of sticks drop in place.

Biscuit Painter Points. *John Doyle* of *Ankeny, IA,* came up with a simple way of creating some stand-off blocks for the stack of cabinet doors that he was finishing. Using a length of scrap plywood, he cut multiple biscuit slots along it, glued biscuits in the slots, and cut the blocks free at the miter saw in the lengths he needed.

Sander Boom Arm

I sand a lot of projects at my workbench. The problem is that the power cord and the dust collection hose of the sander are always in my way. Either they're tugging as they hook on the edge of the bench, or they trip me up as they snake around my feet. I decided to solve this frustrating problem once and for all.

The answer came in the form of a swinging arm. With the help of an eye bolt and hook-and-loop strap, it holds the cord and hose up out of the way.

The arm swings freely because it's attached to a disc that rides on a lazy Susan. And, as the photo shows, the lazy Susan is attached to another disc that's mounted on a post. The stiffness of the hose serves to move the arm back and forth as needed. A base attached to the post makes it easy to clamp to the bench. The drawings below provides the details on how to make the arm.

Dan Martin
Galena, Ohio

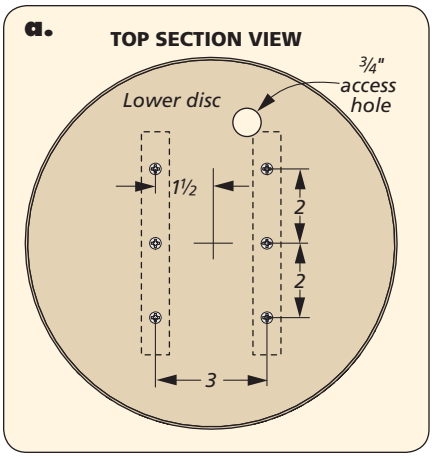

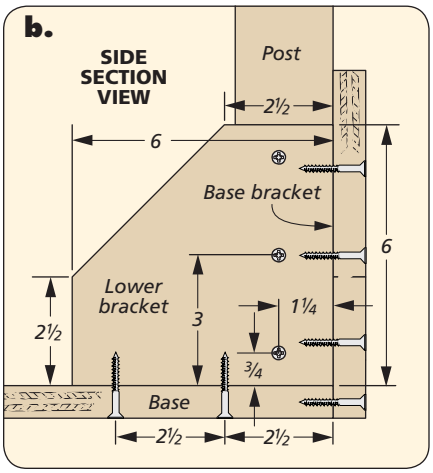

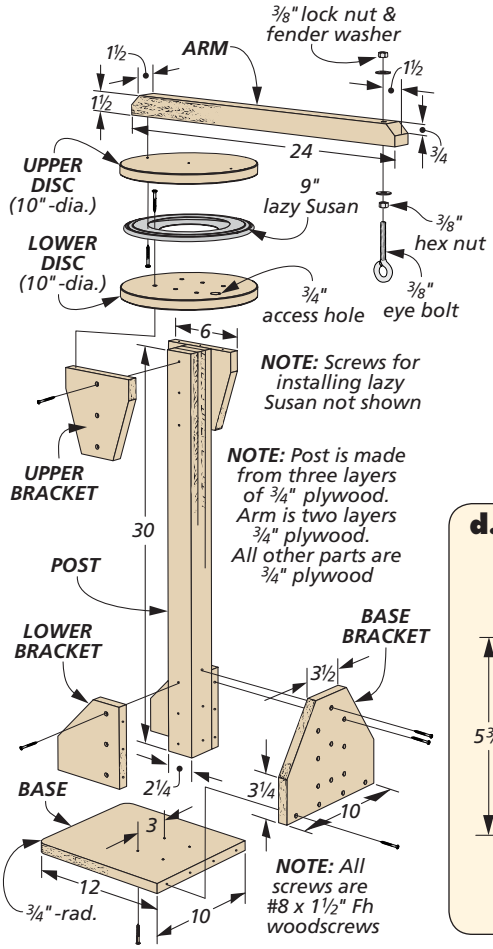

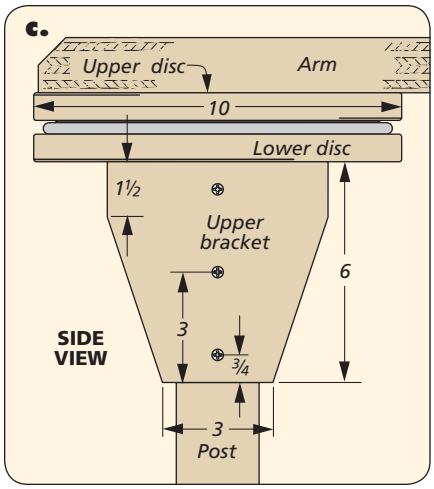

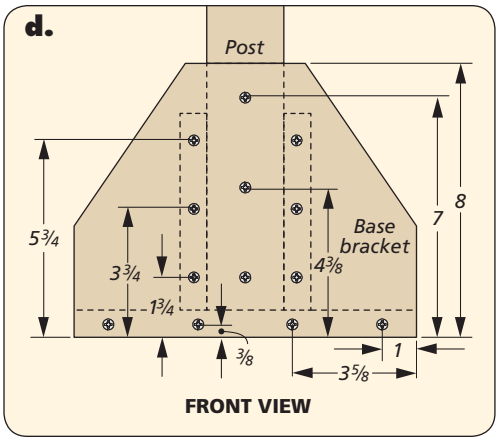

all about

choosing & using Waterproof Glues

Outdoor projects are a favorite of many woodworkers. And when a project ends up being exposed to the elements (like the garden tower shown on page 28), having the right glue to help hold everything together is critical to a project's success.

▼ A Type II, water-resistant glue would be fine for building a piece of patio furniture that only sees occasional moisture.

WATERPROOF OR RESISTANT?

So what makes a glue waterproof as opposed to just water resistant? In a word, it comes down to testing. The criterion set out by the *American National Standards Institute*, or ANSI, determine if a glue meets the Type II or Type I rating.

Type II glues are the first level in exterior wood glues. They're simply water resistant and are designed for the occasional exposure to water, like the outdoor patio table shown in the photo at left. As long as a joint isn't continually exposed to wet conditions, it'll hold up well.

But for true waterproof protection, you'll want to stick with the Type I glues (like all of the glues shown in this article). These glues are put through a testing regimen that entails extreme temperature and humidity conditions.

▲ Perhaps one of the most popular exterior PVA glues is *Titebond III*. It's relatively inexpensive, plus quick and easy to apply.

The tests involve boiling and baking the glued joints several times, and then assessing the strength while the wood is still wet. If the wood breaks before the glue joint fails, the glue passes the test.

PVA GLUES

Polyvinyl acetate, or PVA, glues are probably the most common used for woodworking. And recent advances have made them extremely durable for outdoor exposure.

Perhaps the biggest advantage of using PVA glues is the low cost. Dollar for dollar, PVA glue is the least expensive, especially when gluing up large surfaces.

It's also easy to apply on small joinery sections, like the tenon shown in the right photo on the previous page. And a little water is all you need for clean up (lower left photo). Just be sure that the PVA you choose says "waterproof" on the label to guarantee Type I protection.

▲ PVA glues, like this *Wood Glue Max* from *Elmer's*, are easy to clean up with water, both on your projects and application tools.

POLYURETHANE GLUE

For many woodworkers, polyurethane, or "poly" glues have become the go-to choice when a project will be exposed to moisture. If you've never used a poly glue, you may be surprised to find that this waterproof glue requires water to cure. The bonding surfaces need to be dampened before adding the glue, as shown in the photo at right.

POLY BENEFITS. Aside from this extra application step, poly glues have a couple of advantages over regular PVA wood glue. First, they can withstand temperature changes without losing their grip. Plus, they'll bond different materials, such as metal or ceramic, to wood.

DRAWBACKS. The biggest knock on poly glue is that it foams as it cures (main photo, previous page). This foam can be cleaned up using acetone or mineral spirits before it dries. Or simply sand the glue away after it dries. The trouble here is that it can be difficult to remove from tight areas. Another downside is that once opened, these glues have a short shelf life.

Choosing whether to use a poly or PVA glue really comes down to personal preference. But I think they're both deserving of a place in my shop. And to learn more about some other waterproof glues with unique benefits, check out the box below for a couple of interesting options. W

▲ Having water on hand is necessary to activate polyurethane glue. Wet the surfaces and then spread the glue.

Worth a Look: SMALL-SCALE REPAIRS

If you're in need of a waterproof solution for a small repair, consider giving one of these options a try.

LIQUID NAILS: HOME PROJECTS. This moisture-curing polymer glue is a hybrid of sorts. It can be applied to wet areas, but moisture isn't required for the curing process. This adhesive can also fill gaps up to ¼" wide (left photo below).

MARINE EPOXY. For repairs that may be submerged in water, it's best to consider a two-part marine epoxy. It's messier and costlier than other options, but it will hold up to the wettest of conditions.

▲ This special moisture-curing polymer from *Liquid Nails* can fill gaps, like on the chewed-up tenon shown above.

▲ For small applications, most epoxies are sold in convenient bottles that dispense the right amount of hardener and resin.

quick & easy

Loose Tenons

Loose tenon joinery comes pretty close to the ideal joint in my book. It provides a good balance between high strength and ease in creating the joint.

In essence, a loose tenon joint connects two workpieces with a separate tenon. The tenon is housed in matching mortises cut in the mating parts using a router and a jig. Compared to a traditional mortise and tenon joint, the loose tenon simplifies the process by reducing the number of operations to complete the joint.

Like many woodworkers, I like to tinker with a technique to find ways improve it. I think there's a way to make loose tenon joinery even easier to use.

TENON TROUBLE. The weak link, in my opinion, has always been the actual tenon. The process of making the tenons requires several steps. It can be time-consuming and fussy to get everything dialed in so the tenon fits snugly.

THE SOLUTION. The solution to my tenon woes came from a similar joinery system — the *Festool Domino*. Here, a dedicated tool cuts a slot to accept a pre-made loose tenon called a *Domino*. The cost of a *Domino* joiner ($1,000) means it doesn't fit the budget of some woodworkers (including me).

However, the *Dominos* themselves caught my eye. These small hardwood blocks are consistently milled and come in a range of thicknesses and lengths to suit a variety of needs. One size in particular, 8mm-thick, works great for the ¾"- thick to 1"-thick materials commonly used in the projects I build.

So instead of using the *Domino* joiner to make the mortises to accept the tenons, I could use a plunge router and simple jig. What's more, 8mm equals a 5/16" fractional size, so finding a router bit to match wouldn't be difficult.

The 8mm *Dominos* come in two lengths: 40mm and 50mm. I prefer the longer size for stronger joints, but the shorter version will work just fine, too.

THE BIT. With the tenons taken care of, the next order of business is getting a bit to cut the mortises. As I said, finding a 5/16" bit isn't too difficult. Many router bit manufacturers offer 5/16"-dia straight and spiral upcut bits.

Recently, though, I've discovered spiral end mill bits used in metalworking.

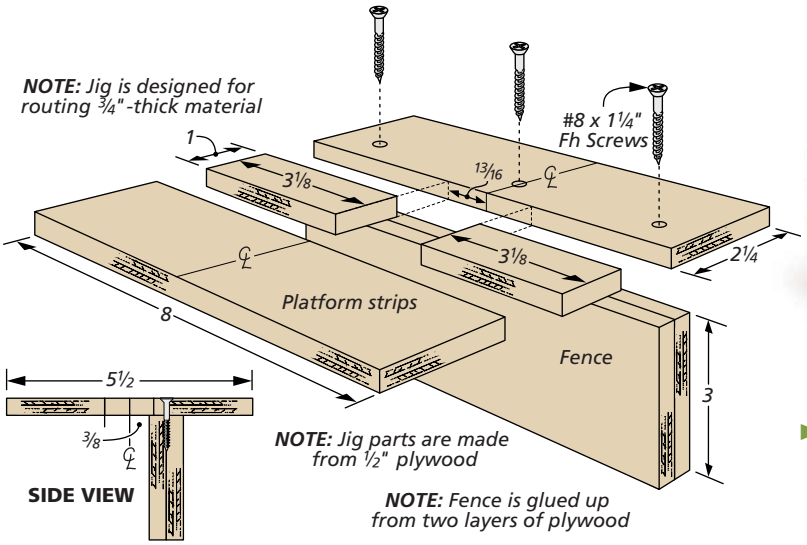

Routing a row of mortises increases the strength of leg and apron assemblies used in tables or case pieces.

These have four cutting flutes and create smooth, consistent mortise walls. The only hurdle is mounting the 5/16"-dia. bit in a ½" router collet. But that isn't a problem. A ½" to 5/16" (8mm) collet adapter is inexpensive and easy to find (refer to sources on page 67).

SIMPLE JIG. The jig I use to make the mortises is shown above. It consists of a platform and fence. It's designed for use with a 1" O.D. guide bushing. The platform supports and guides the router. It's glued up from four pieces of plywood. A centerline drawn on the platform and inside the slot helps locate the jig on the workpiece.

The center strips match the width of the guide bushing and are spaced from the centerline to create a mortise that's slightly longer than the width of a *Domino* (about 15/16"), as you can see in the drawing at right. This extra length in the mortise gives you some wiggle room to align parts during assembly. The fence is positioned on the platform to center the mortise on the stock you're using.

IN USE. In keeping with the design, using the jig is simple, as well. It begins with some layout. Mark a centerline for the joint on each of the mating pieces. You can see this in the main photo on the previous page.

The photos below pick up the story from here. Align the workpiece in the jig and clamp the two together. After securing the workpiece in a vise, set the router on the top of jig with the guide bushing nestled in the slot in the platform.

Creating a mortise goes pretty quickly. Rout the mortise in a series of progressively deeper passes, as shown in Photo 1. With each pass, move the router side to side on the platform.

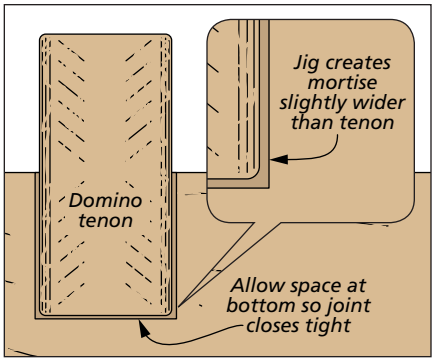

I set the bit to cut a mortise that's slightly deeper than half the tenon length, as shown in the drawing above. This way, the tenon won't bottom out and prevent the joint from closing.

The mortise-cutting process is repeated for the mating stile, as you can see in Photo 2. At this point, the joint is complete and it's ready to accept the *Domino* for assembly.

VERSATILE APPLICATIONS. Because loose tenon joinery is so quick and easy, I'm using it more and more. It's a natural fit for frame and panel construction used in cabinets and doors. But the technique works just as well for other types of project assemblies. Basically, you can use loose tenons anywhere you'd use a mortise and tenon joint, like face frames or the example above.

Adding *Dominos* to loose tenon joinery makes a great technique even more appealing. And I think you'll agree that easy setup, quick execution, and sturdy assembly is a winning combination. W

With the workpiece clamped in a vise, align the marks on the workpiece and the jig (inset) and clamp the rail in place.

To rout a mortise in the stiles, clamp the workpiece on edge in the jig. Secure the jig fence in a bench vise.

better safety & precision with JessEm Stock Guides

▲ The *JessEm Stock Guides* are made of heavy-duty, quality parts and include all of the tools needed for installation.

Keeping a workpiece parallel to the blade, while also maintaining an adequate amount of downward pressure, is a critical part of ripping lumber on a table saw. Ensuring that a workpiece is moving perfectly straight as it's fed over the blade is essential to avoiding potentially dangerous situations – like kickback.

For many years, most of us have turned to featherboards and other hold-downs to accomplish this task safely. But a set of new table saw stock guides from *JessEm* are looking to change the playing field when it comes to table saw safety.

HOW THEY WORK. The *JessEm Clear-Cut Table Saw Stock Guides* work by registering the workpiece tightly against the fence and the table saw surface at the same time. An overview of the stock guide parts are shown at left.

The mounting track is designed to be installed on the top of a standard T-square style rip fence. It sits on the flat surface between the fence faces, as shown in the main photo above. The mounting track has a T-slot that allows the bases of the two stock guides to be easily slipped into place. Knurled knobs at the front and back of each base allow it to be tightened down (left photo, top of next page).

A steel shaft extending from the base houses the roller bracket, which in turn holds a set of urethane rollers. To restrict lift, the guides are spring-tensioned to keep them snug against the top of the workpiece, as shown in the right photo at the top of the next page. The rollers themselves are set at a 5° pitch that helps to push the workpiece toward the rip fence (left photo on next page).

The urethane on the rollers is slip-resistant, and the rollers also incorporate one-way bearings to ensure the

▲ Installation of the stock guides couldn't be easier. With the mounting track in place on the rip fence, simply slide the base of the stock guides into the T-slot and tighten the locking knobs.

▲ Once the hold-downs are locked securely in the mounting track, lower the roller bracket onto the workpiece and tighten the knob. The roller brackets can be adjusted into multiple positions.

correct feed direction. This helps prevent kickback while at the same time ensuring a precise cut. For tall rip fences, the roller brackets are extendable up to 1½", (middle photo below).

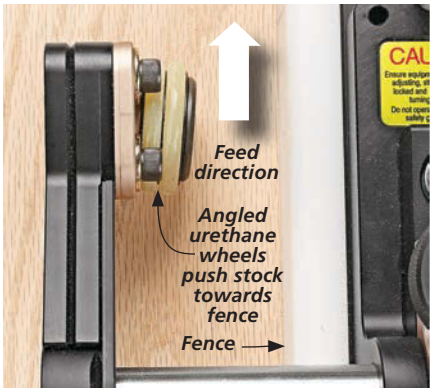

▲ The dual wheels, which are pitched toward the fence, and the one-way bearings work to prevent kickback.

SETTING UP. After the mounting track is in position on the rip fence, the rest of the setup process is pretty intuitive. Slip each roller assembly on the track, lock them in place, and lower each wheel until it rests on the workpiece. Then tighten the clamping knob.

It's best to place one guide in front of the blade and one behind the blade.

▲ The *JessEm Stock Guides* have built-in adjustability to accommodate taller table saw rip fences.

And always keep the outfeed guide between the blade and the rip fence to avoid a kickback situation. When not needed, the guides can easily be removed. Or they can be rotated out of the way to rest on top of the rip fence.

CONCLUSIONS. After using these for several days, I found that I really didn't want to be without them. Their impressive quality really sealed the deal in my book. However, with a retail price around $250, they may not be for everybody. But if safety and accuracy are at the top of your priority list, you may want to give them a shot.

JessEm even designed a set of stock guides for use on the router table. Check out the box below for more information about them. Sources on page 67 has information on where you can find either of these products. W

Easy & Accurate: ROUTER GUIDES

Considering how much I liked the table saw guides, I wasn't a bit surprised that I had a similar opinion of *JessEm's* guides for the router table. Made using the same urethane rollers with a 5° cant, the router table stock guides come out of the box ready to slide onto a router fence equipped with a T-track. Two knurled locking knobs hold them in position.

If your fence doesn't have a T-track, an additional mounting kit is available that makes installation on a plain-faced fence a breeze. Because of their smaller and simpler design, the router table guides sell for around $100, and the additional mounting kit runs about $15. They're a worthwhile investment to work safely and help prevent any workshop mishaps.

▲ The router table stock guides slip right into a T-track. The knobs (inset photo) lock their position on the workpiece surface.

woodworking technique

beef it up with Glue Blocks

As woodworkers, we take pride in the projects we build. This includes everything from selecting the materials and design to cutting snug-fitting joinery and applying the finish.

With that in mind, it sometimes pays to kick up the strength of a project even more. Doing this can help a project stand up to hard use even as it's passed from generation to generation.

You have some options for strengthening a project. You can increase the size of the parts. Thicker and wider pieces are stiffer. Another method is to increase the size of the joints (longer tenons or deeper dadoes). However, that isn't always possible without weakening another part.

That doesn't mean you're out of luck. Traditional craftsmen used another approach that boosted the strength of joints and assemblies while still providing the maximum amount of design flexibility — glue blocks.

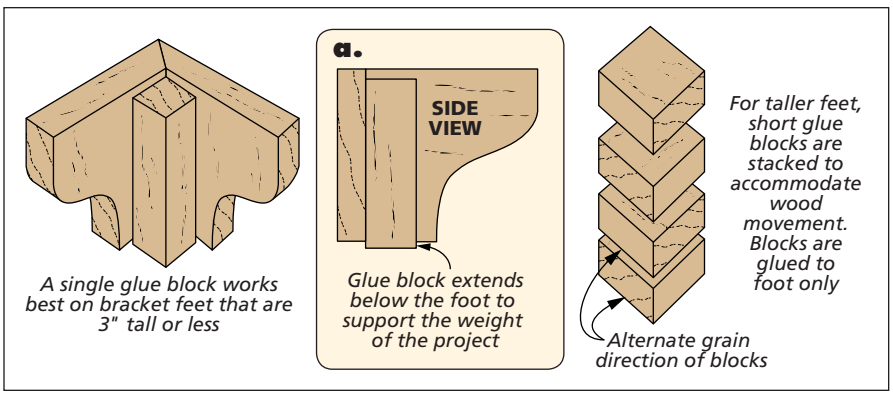

THE BASICS. Glue blocks are small pieces of wood strategically located to provide reinforcement. They do this work in two ways. The blocks themselves add structure to help resist the stresses placed on a joint or component. In addition, even though the blocks are fairly small, they contribute increased glue surfaces.

As I mentioned, what's nice about glue blocks is that you don't need to change the design to accommodate them. Also, the blocks are rarely even noticed. I usually add them once an assembly (or even the entire project) is complete. The box on the next page shows how to do this. Finally, the glue blocks can be made from pieces pulled from the scrap bin.

While the general role of a glue block is reinforcement, how it fills that role depends on the application. You don't

need to scatter glue blocks willy-nilly around your projects. Here are four common places to employ glue blocks, starting at the bottom of a cabinet.

BRACKET FEET. I use bracket feet to give a project a visual lift by creating some open space under the case. These are often joined with miters, so the grain wraps around the corner. Miters are a notoriously weak glue joint. A corner block tucked into the backside of the joint puts in some extra muscle, as shown in the drawings on the previous page.

There are two approaches you can take here. On short feet, one long glue block can do the trick. On taller (wider) feet, where wood movement is a concern, the solution is to glue in smaller, square-shaped blocks. The grain direction on each block alternates to ensure that there's a long-grain bond on each side of the foot assembly.

In some period pieces, the glue block extends below the foot (detail 'a'). This protects the foot from wear and tear when the cabinet is moved around.

DRAWERS. The second most-common place to use glue blocks is drawers. Drawer sides and backs are often made from thin stock to keep the drawer light and give it a finer look. That comes at a cost since it doesn't leave much room for a groove to accept the drawer bottom. Glue blocks come to the rescue here by acting as cleats to "extend" the drawer sides, as shown in the main photo on the previous page.

DRAWER STOPS. The pocket where a drawer fits into the case is another candidate for glue blocks. The drawing at left shows a glue block at the back of the case. This acts as a stop to position the drawer consistently when it's closed. The block protects the case back from damage when closing the drawer, too.

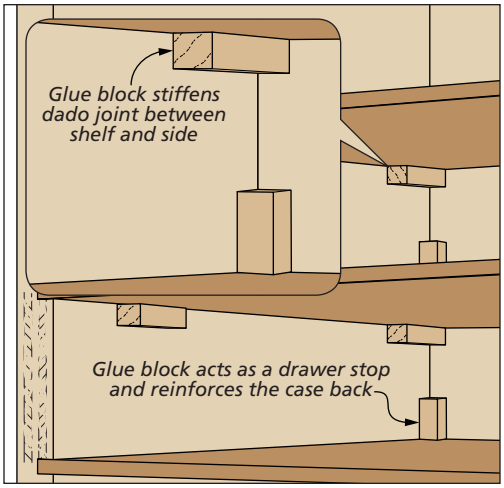

CASE SHELVES & DIVIDERS. In the same drawing, you can see another set of glue blocks positioned under the fixed shelf. These glue blocks function in a similar way to the glue blocks in a drawer. When the shelf sits in a dado, the glue blocks add side-to-side rigidity to stiffen the case against racking. This isn't necessary on every project.

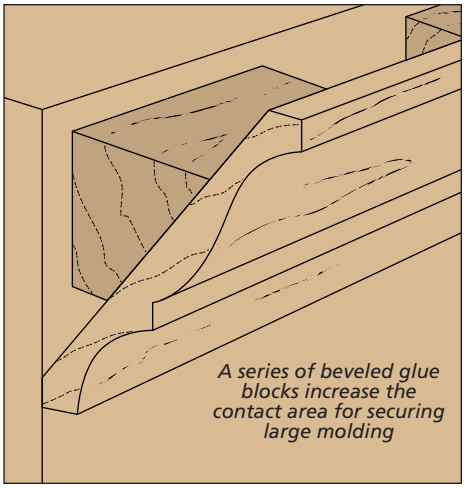

I like to use them on tall, narrow cases or those that need to support a lot of weight, like bookshelves.

CROWN MOLDING. The last place that I want to discuss using glue blocks is at the top of a cabinet. Up here, crown molding creates a focal point for the project. As it projects up and away from the case, there's often only a narrow strip for gluing and nailing it in place.

The drawing above highlights how glue blocks increase the surface area for attaching the molding and fill in some gaps. What's important here is that the glue blocks are beveled to match the "spring" angle of the molding.

In just a few minutes and with a handful of glue blocks, you can dramatically improve the strength of your project. And you can be assured that its strength matches its looks. W

How-To: CREATE A RUB JOINT

Adding glue blocks shouldn't be a time-consuming step in the construction process. The problem is that due to their location, it may be tough to apply clamps. All it takes is using the right technique and the right glue.

I use a rub joint to install the blocks. The joint relies on friction and creating a slight vacuum to hold the block in place without clamps. For the glue, I like high-tack molding and trim glue. Apply a bead of glue on the block, press it into position and rub it back and forth until you feel the glue grab (photo at right). Then let it sit for a few hours.

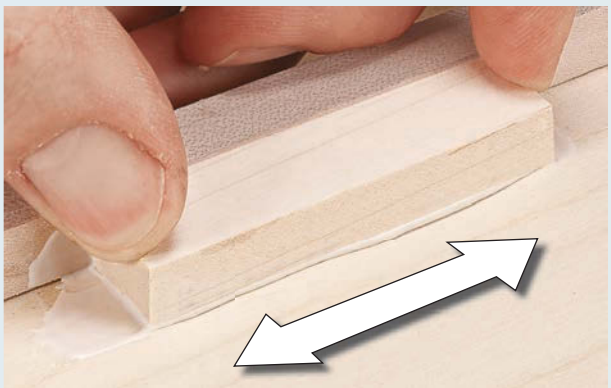

▲ Molding glue (right) is thicker and has a high tack, so it grabs and sets quickly. This allows you to use a rub joint (above) or simply hold a glue block in place for a minute or two.

Weekend Project

scalloped-lid Box

The unique lid on this box looks like an optical illusion at first glance. The key to building it starts with a single router bit.

▲ A simple spring-loaded latch is hidden from view and pops the lid open with a gentle push on the frame.

The first thing most people notice about this box is the distinctive lid panel. Giving it just a brief look, it appears to be hand carved from a solid blank. But it's actually the product of several glued-up strips that are shaped before assembly. Most of the shaping takes place at the router table using a bit not generally associated with small-box building.

SANS HARDWARE. Moving past the stylish lid, the next unexpected thing you'll notice is that there doesn't appear to be any way to open it. The lid is slightly recessed within the framework of the box and looks to be "floating" in the opening with no visible handle — or hinges, for that matter.

It takes a little bit of scrutiny (along with some manipulation) to realize that a light push on the front of the lid activates a spring-loaded latch inside (inset photo). A pair of hidden hinge pins recessed in the box sides and lid complete the illusion.

LID FIRST

The box itself is pretty standard fare — with splined, mitered corners and a rabbeted plywood bottom. Because of this, I decided to build the panel for the lid first. I then sized the box to fit around the frame of the finished lid.

STRIP BLANK. The first order of business is to cut a blank for the strips that make up the lid panel. I wanted a wood without much grain pattern, so I made my blank from ¾"-thick maple.

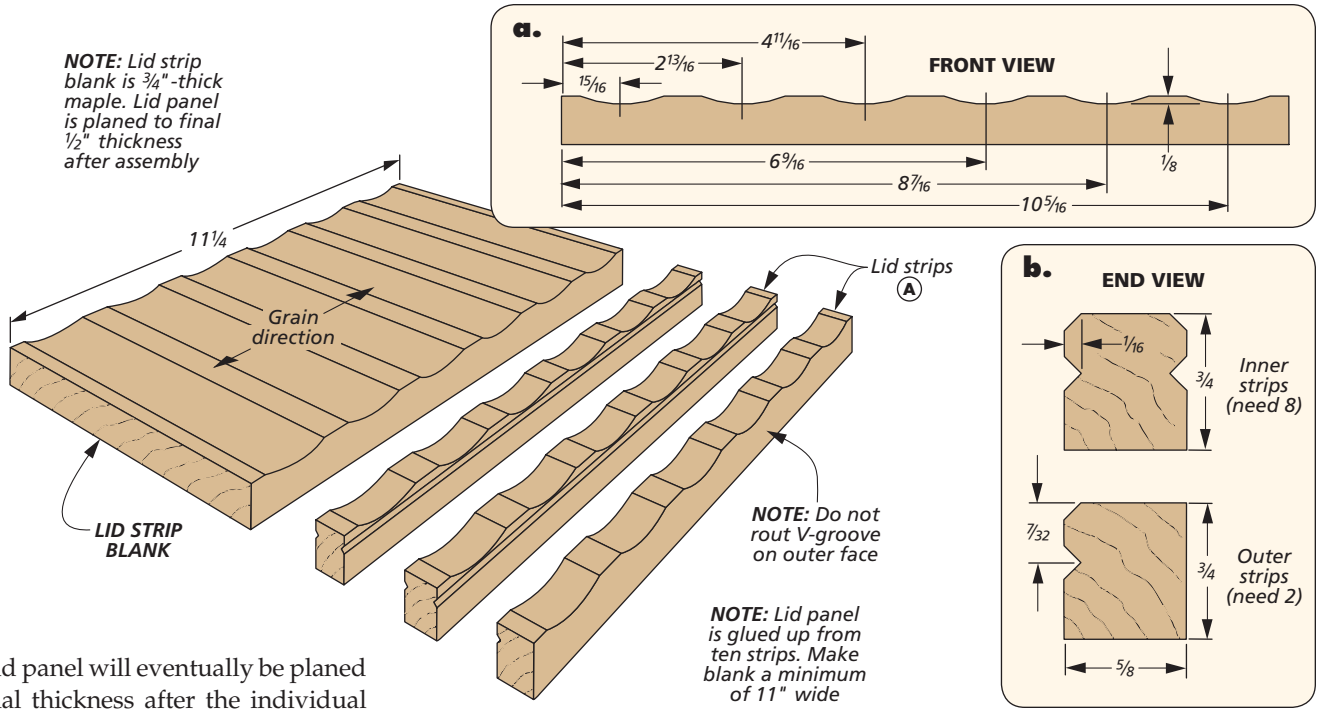

The lid panel will eventually be planed to final thickness after the individual strips are glued back together. I cut my blank from a 12"-wide board. If you can't find stock this wide just use two narrower blanks. I also left my blank extra-wide and long. You'll cut it to final length after routing.

ROUT SCALLOPS. Figure 1 at right shows the setup for making the scalloped cove cuts across the blank. Use a horizontal crown molding router bit. Detail 'a' above provides the dimensions for the cove spacing.

Simply work from one end of the blank to the other at the router table, moving the fence back between passes. After routing all six coves, you can cut the blank to the final length of 11¼", leaving equal "flats" on both ends. I also took the time now to sand each cove using a rounded sanding block.

RIP & GROOVE. Ripping the strips free from the blank is next (Figure 2). You'll need a total of ten to make the lid. I ripped my strips a little wide and then planed the cut edges to arrive at the final ⅝" width.

To complete the strips, cut a V-groove along the inside face of each one (Figure 3) and rout a chamfer along the top edges (Figure 4). When assembling the strips later on, the grooves keep the glue from squeezing out the top, where it would be difficult to clean up. The two outer strips only receive grooves and chamfers on their inside faces and edges.

How-To: MAKE THE LID STRIPS

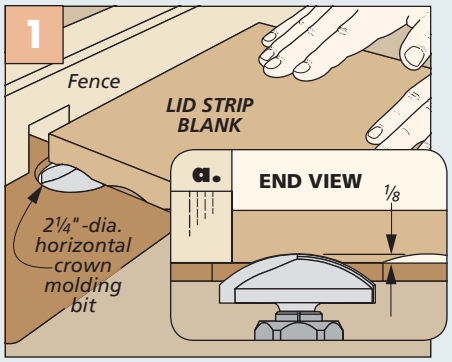

Shallow Coves. Use a horizontal crown molding bit to make the cove cuts. Move the fence after each pass.

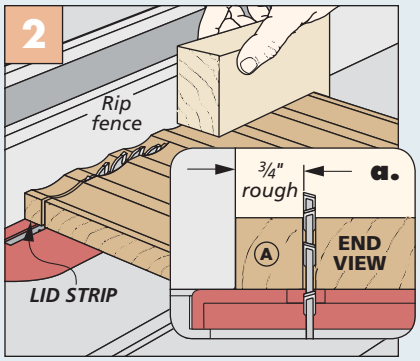

Rip the Lid Strips. Rip the strips free from the blank. Leave them a little wide and plane the cut edges.

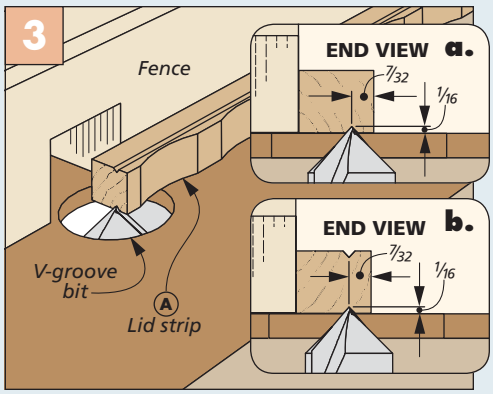

Grooves. Use a V-groove bit to rout the grooves on the inside faces of the strips. The grooves help prevent glue squeezout.

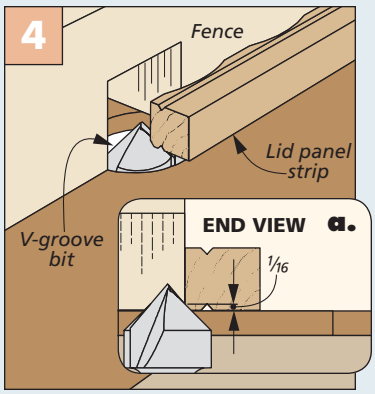

Chamfers. I used the same bit to make the small chamfers on the top edges of the strips.

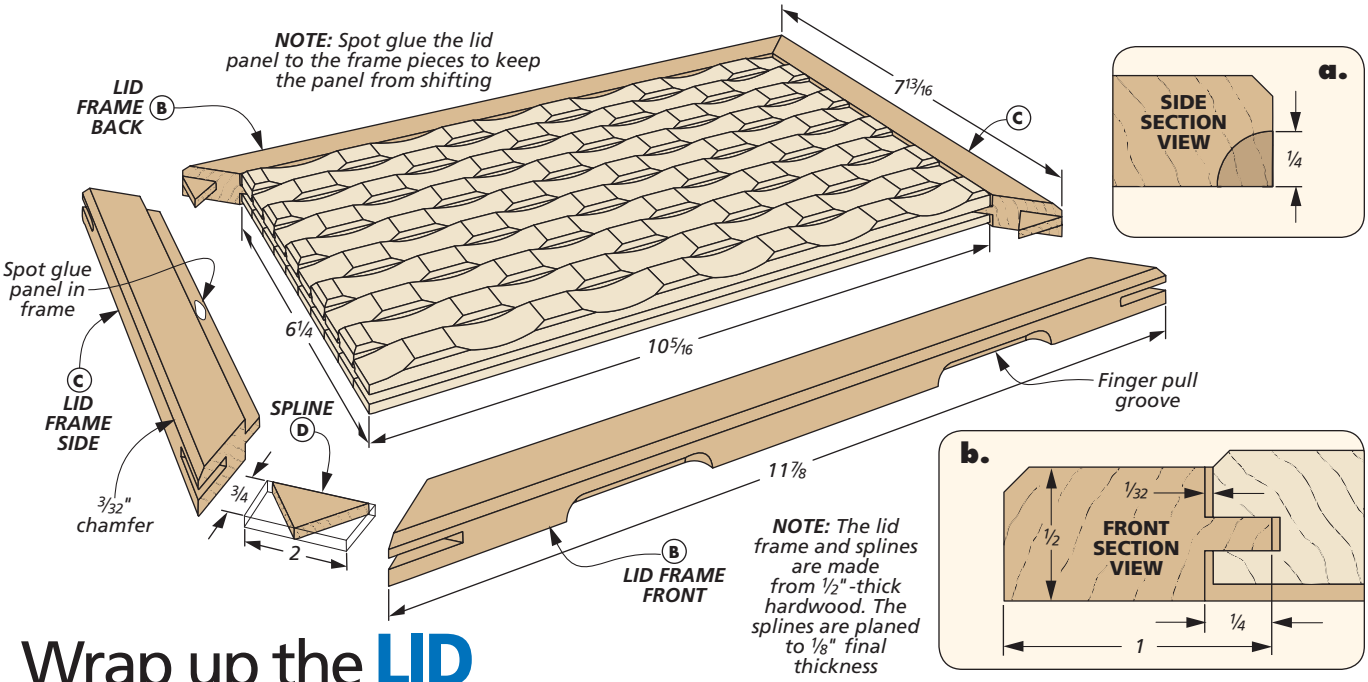

Wrap up the **LID**

With the ten lid panel strips shaped and cut to size, it's time to arrange them into their final pattern before gluing them together. To do this, I made an assembly platform like the one shown in the How-To box below. After that, you'll complete the mitered lid frame and add splines to the corners.

MAKE THE JIG. As you can see in the drawing above, the lid panel strips are arranged by offsetting every other one so that the "flats" on one strip line up with the center of the coves of the strips on either side. The jig below helps to maintain this alignment when gluing things together.

The critical jig dimension is the length of the fixed cleat. I determined how long to make mine by holding two of the strips together in their offset position and measuring from the end of one to the end of the other.

You can then cut the fixed cleat to that length and attach it to the base. The end cleats act as registration points for alternating the lid panel strips and holding them in place during glueup.

ASSEMBLY TIPS. Take note of a couple of things before assembling the strips. First, when applying glue to the edges of the strips, be sure to keep it below the V-groove. This will keep the glue from squeezing out the top when pressure is applied. And second, put a coat of wax (or use waxed paper) on the face of the jig to avoid gluing the panel to the jig.

CROSSCUT. After the panel comes out of the jig, you'll need to crosscut both ends to arrive at the finished size, as shown in the box below. To trim the lid panel to final length, I removed an equal amount

How-To: GLUE UP THE PANEL

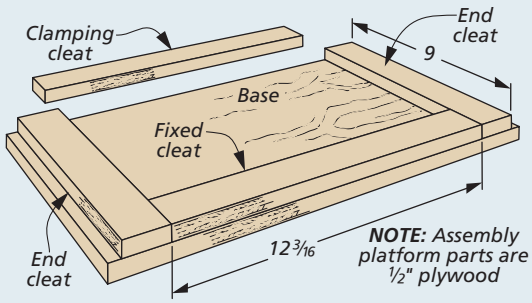

Assembly Platform. The platform secures the lid panel strips in a staggered fashion. Be sure to use wax or waxed paper before gluing.

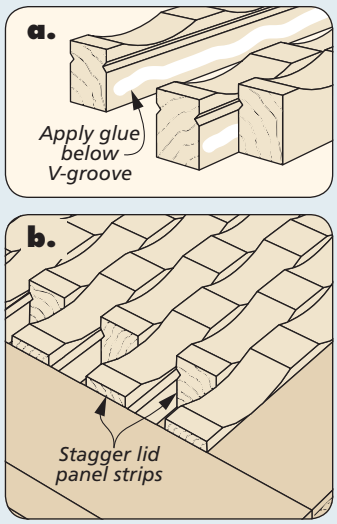

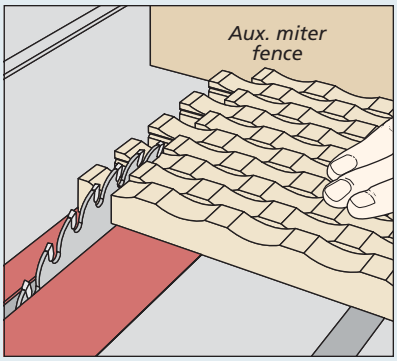

Trim Panel. Remove an equal amount of material from both ends to trim the panel to final length.

of material from each end so the flats and half coves on each end of the panel matched. Then a few passes through the planer (bottom side up) brings the panel to its final ½" thickness.

To complete the lid panel, just a couple more steps are needed. Figures 1 and 2 at right provide the details. First, create a groove around the perimeter of the panel using a slot-cutting bit. This will house the frame pieces. You can then switch back to a V-groove bit to make the small chamfer around the outside of the panel.

LID FRAME

The completed lid panel is surrounded by a mitered frame. To contrast the maple that I used for the lid panel, I made the lid frame (as well as the box) out of jatoba, a Brazilian hardwood. You can start by cutting the frame pieces to size, but leave them a little long for now.

RABBETS & CHAMFER. Using a dado blade at the table saw, cut rabbets along the inside edges of each frame piece to create the tongue (Figure 3). The goal is to make a tongue that fits in the groove around the perimeter of the lid panel. A quick trip back to the router table to chamfer the outside edge of each frame piece completes the shaping work (Figure 4).

MITER TO FIT. When assembled, the lid panel and frame pieces should have a small expansion gap between them (detail 'b' on the previous page). Back at the table saw, I mitered one end of each frame piece. You can then use a stop block clamped to an auxiliary miter fence to miter the workpieces to their final length, as shown in Figure 5. After checking the gap, glue the frame around the panel and secure it with a band clamp.

SPLINE KERFS. The kerfs for the splines on the corners of the lid are easy to make at the table saw with a simple cradle jig (Figure 6). The splines can then be glued in place as shown in Figure 7.

FINGER GROOVES. All that's left to complete the lid is to rout a couple of finger grooves on the front edge of the frame. A cove bit in the router table makes quick work of this cut, as shown in Figure 8 at right.

How-To: FRAME THE LID PANEL

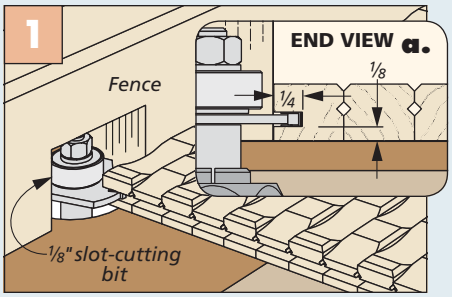

Groove Panel. Use a slot-cutting bit to rout the groove around the perimeter of the glued-up lid panel.

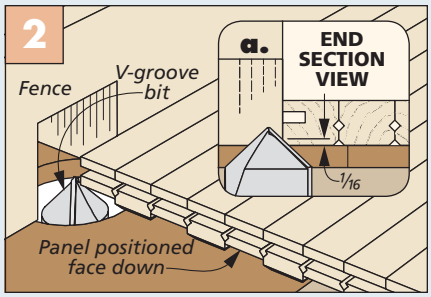

Chamfer Panel. Switch back to a V-groove bit to chamfer the upper, outside edges of the lid panel.

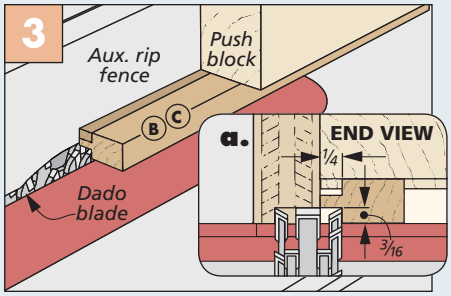

Frame Rabbets. Use a dado blade to create the tongue on the inside edge of the lid frame parts.

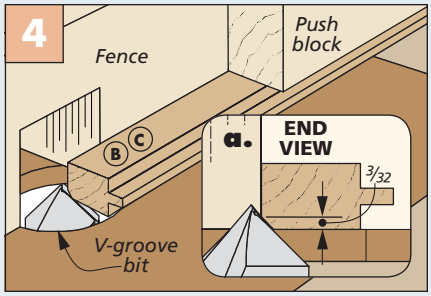

Chamfer Lid Pieces. Using a V-groove bit again, chamfer the upper, outside edge of the frame pieces.

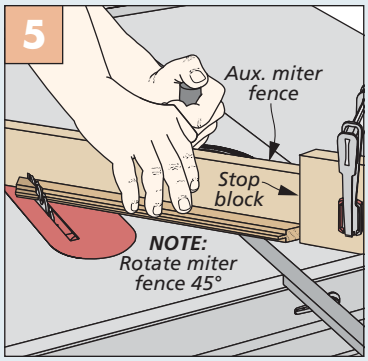

Miters. After the initial cut, use a stop block to ensure the matching pieces are the same length.

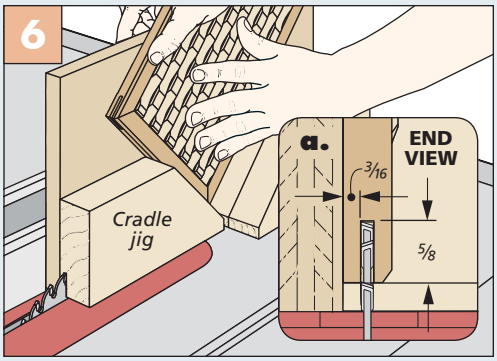

Spline Kerfs. For information on making this cradle jig for cutting the spline kerfs, turn to Shop Notes on page 65.

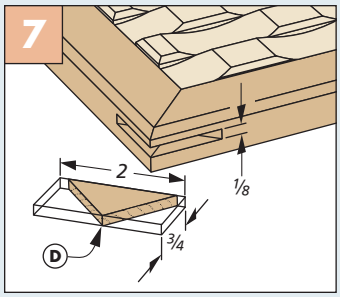

Add Splines. After gluing the splines in place, trim them flush and sand them smooth.

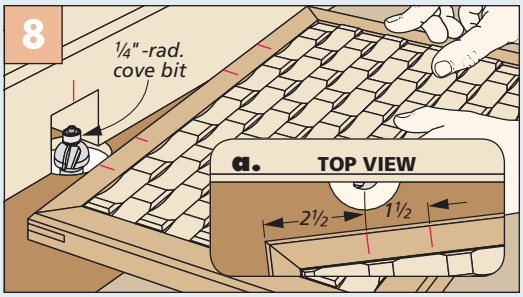

Finger Grooves. With the finger groove locations marked on the lid frame, pivot the panel into the bit and rout to the end line.

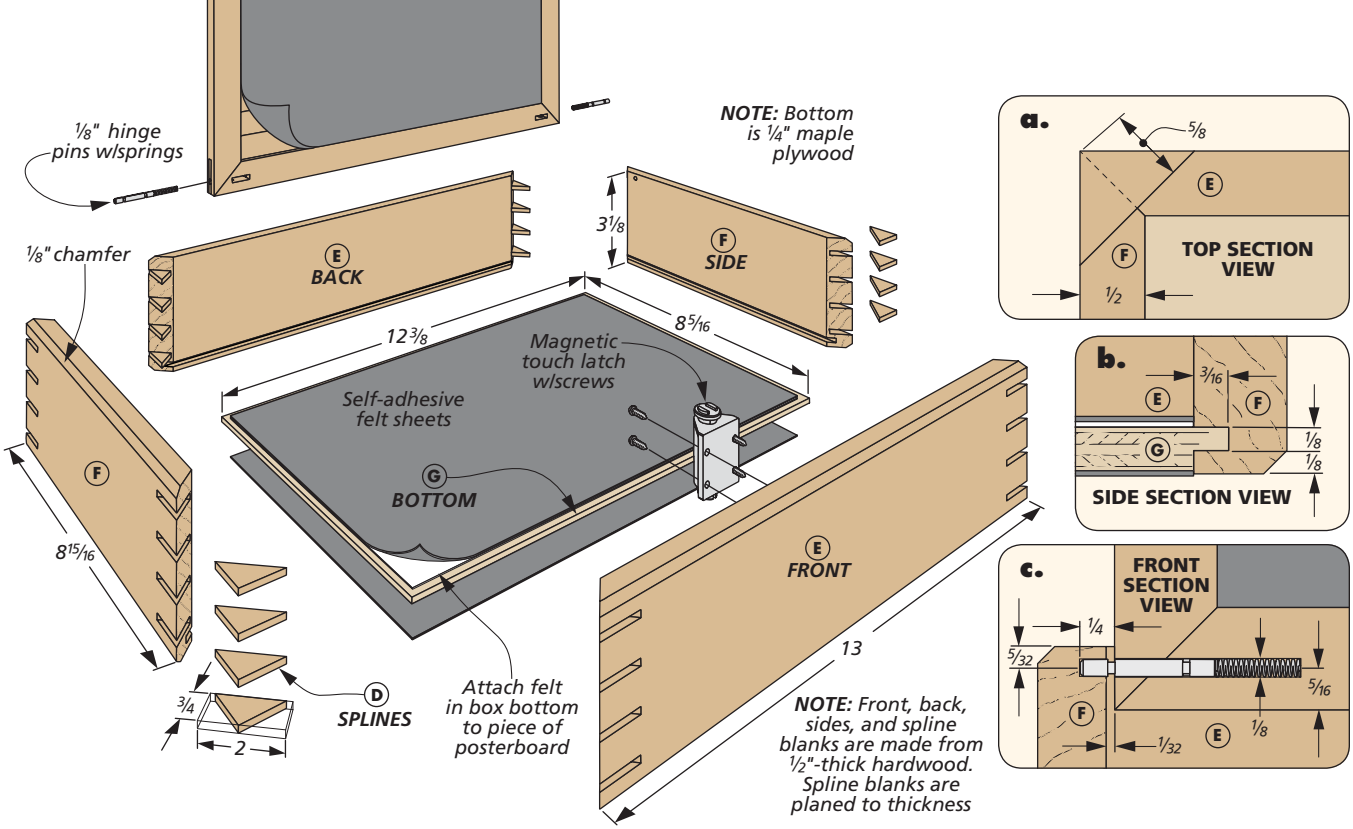

Completing the **BOX**

The effort you just put into making the lid is about to pay off with a completed box. The box itself goes together pretty seamlessly, and then it's just a matter of adding some hardware and lining the box and lid with felt.

FIRST THINGS FIRST. For the box, start out by cutting the front, back, and sides to size. Again, you'll want to leave these pieces long for now. Like the lid frame, I used jatoba for these parts.

Next, I went ahead and cut the narrow groove on the inside face of each piece (detail 'b'). These grooves hold the rabbeted bottom in place later on.

FITTING BOX TO LID. When finished, the framed lid will sit inside the upper edge of the box with just a small gap around all four edges. To get the fit I was looking for, I mitered the ends of the box pieces and used the lid as a gauge to check the fit. Sneak up on the final length of all four box pieces, being sure to leave a very small space between the lid and the box (about 1/32" on all four sides). You can always sand the edges of the lid later on if the fit is too tight.

DETAILS BEFORE ASSEMBLY. Just a couple more things need to be completed before gluing the box together. The first is to locate and drill a hole in each side piece for the hinge pins. Figure 1 at lower left provides the details.

You can then cut the plywood bottom to size and rabbet the bottom edges (detail 'b,' above). Like the lid, it's best to assemble the box using a band clamp to hold the box together while the glue dries.

When it's removed from the band clamp, I chamfered the top and bottom edges of the box, as shown in the main drawing above. Again, I turned to a V-groove bit in my router table to take care of this detail.

MORE SPLINES. Next, use the cradle jig that you made earlier for the lid to cut the spline kerfs (Figure 2). The splines reinforce the mitered corners. After gluing the splines in place, trim and sand them flush, as before.

How-To: DRILL & SLOT

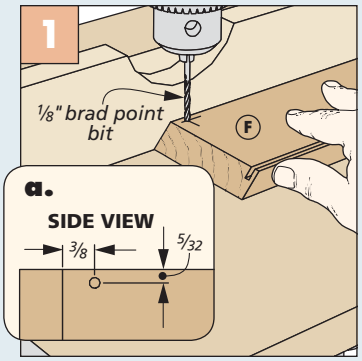

Hinge Holes. Use a brad point bit at the drill press to drill the holes for the hinges.

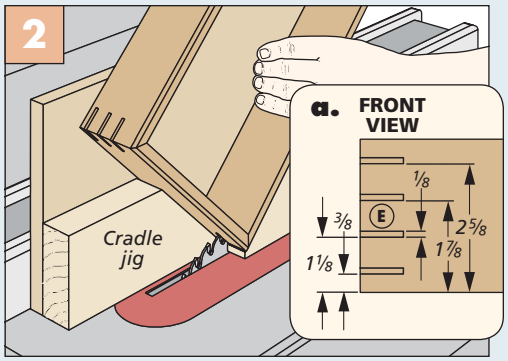

Box Spline Kerfs. Using the same cradle jig used for the lid kerfs (Shop Notes, page 65), cut the kerfs in the corners of the box.

How-To: INSTALL THE HARDWARE

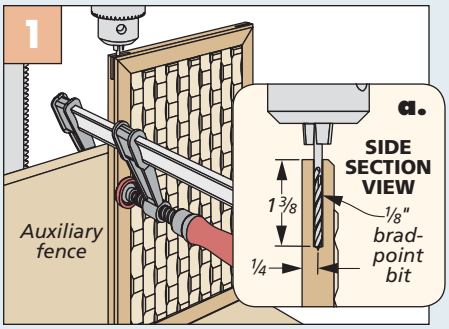

More Hinge Pin Holes. Use a tall auxiliary fence to stabilize the lid while drilling the hinge pin holes.

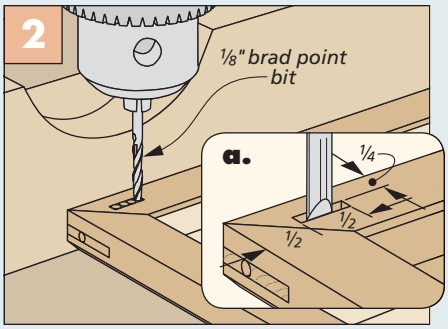

Access Mortise. Drill overlapping holes to remove the bulk of the waste. Clean up the opening with a chisel.

▲ This unique hinge pin set and magnetic touch latch allow the hardware to remain hidden.

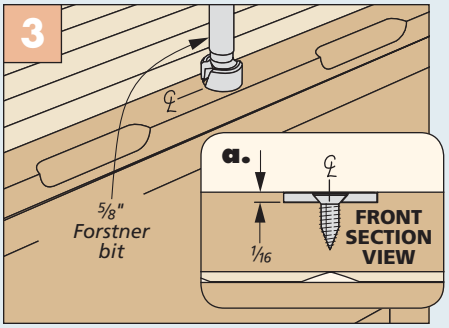

Strike Plate. Use a Forstner bit to drill a shallow hole on the underside of the lid for the strike plate.

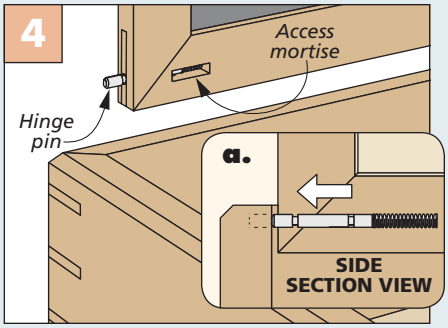

Hinge Operation. Insert the springs in the lid, followed by the hinge pins. Compress the pins and lower into box.

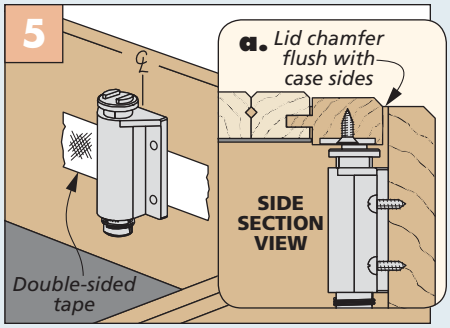

Magnetic Touch Latch. A strip of double-sided tape holds the latch in place while lining up the lid position.

ADD HARDWARE

The How-To box above walks you through the remaining steps for finishing up this project. This includes installing the hinge pins and the magnetic touch latch. You'll then be able to add the felt and the finish of your choosing. All of the hardware and finishing information can be found in Sources on page 67.

INSTALL HINGES. Since the mounting holes for the hinge pins are already drilled on the inside of the box, the next step is to locate and drill the corresponding holes in the edge of the lid (Figure 1). As shown in Figure 2, a small mortise on the inside of the lid frame allows access to the hinge pins for easy removal.

TOUCH LATCH. Locating the touch latch starts by installing the strike plate on the underside of the lid. This is recessed in a shallow hole (Figure 3).

Next, Figure 4 shows how to insert the springs and hinge pins into the lid. You'll then compress the springs and lower the lid into the box, releasing the pins into their mating holes in the sides.

I used double-sided tape while locating the touch latch (Figure 5). The lid should be level on all sides when in the closed position. You can reposition the latch until the spacing is just right.

Now, your completed box is ready for finishing and the addition of the felt. I secured the felt directly to the inside face of the lid. But for ease of installation, I attached the felt for the interior to a piece of posterboard. A bit of felt on the bottom keeps the box from scratching any furniture surfaces. The felt sheet simply gets cut to fit. Your final task is to find a prominent spot to display this beautiful project. W

Materials, Supplies & Cutting Diagram

A	Lid Strips (10)	3/4 x 11 - 11 1/4
B	Lid Frame Front/Back (2)	1/2 x 1 - 11 7/8
C	Lid Frame Sides (2)	1/2 x 1 - 7 13/16
D	Spline Blank (1)	1/8 x 3/4 - 40 rgh.
E	Front/Back (2)	1/2 x 3 1/8 - 13
F	Sides (2)	1/2 x 3 1/8 - 8 15/16
G	Bottom (1)	1/4 ply. - 8 5/16 x 12 3/8

- (1) 1/8"-dia. Hinge Pin Set
- (1) Magnetic Touch Latch w/screws
- (1) 12" x 24" Self-Adhesive Felt Sheet
- (1) 22" x 28" Posterboard

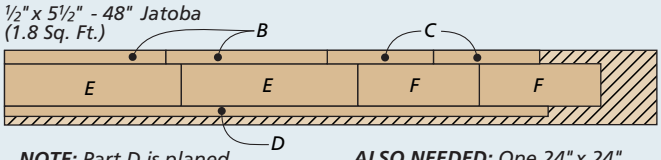

NOTE: Part D is planed to final thickness

ALSO NEEDED: One 24" x 24" sheet of 1/4" maple plywood

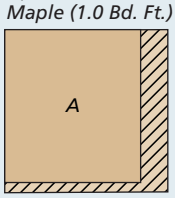

custom brass Hammers

Create your own set of shop hammers using brass stock and a chunk of hardwood. You're sure to pick up a few new skills along the way.

I've made a number of shop tools over the years, including several mallets that were turned on a lathe. But a brass hammer was always a tool missing from my arsenal. The simple and clever design shown above changed all that.

A BRASS HAMMER? You may be wondering, "Why do I need a brass hammer in a woodworking shop?" And that's a valid question. But the truth is, small brass hammers come in handy more often than you'd think. The compact design makes them perfect for chopping out mortises, or the dovetails shown above. Plus, the heft of the brass heads makes them easy to use from a comfortable, seated position without taking full-force swings. And you'll find a brass hammer incredibly useful for adjusting machinery parts, or even hand tools, without marring or damaging them.

BIG OR SMALL. You can choose from the two sizes shown or make them both

for a matching set. I made my set using the same pattern, but a couple of alternative designs are shown on page 26, along with the dimensions you'll need to get started on the heads.

Speaking of the heads, they're made from square, brass stock that machines easily with common files, punches, drill bits, and chisels. Both sizes of handles are made from hickory, but just about any hardwood will work.

HEAD SHAPING

The head design you choose will determine the initial shaping of the brass blank. But regardless of which option you go with, the first operation is the same for all of them. And that's creating the eye for the handle.

OBLONG OPENING. To shape the eye, begin by drilling a couple of overlapping holes at the drill press (Figure 1). These holes define the ends of the eye opening. As I mentioned before, brass is a soft metal and machines rather easily. But with that said, it's a good idea to go slowly while drilling these two holes. Using some cutting fluid or oil is also a good idea to lubricate the drill bit and keep it from overheating.

After the holes are drilled, I used a file to remove the rest of the material between the holes. A single- or double-cut file makes quick work here.

SHAPE SIDES & ENDS. The hammer head design that I chose has a recessed area on each side of the head. To tackle this job, I turned to the band saw as shown in Figure 2. (I used a 3⁄16" standard wood-cutting blade with 10-tpi.)

Start by making a shallow shoulder cut to define the ends of the recess first. You can then work from the middle toward each end to create the slight curve. With the sides formed, use a file to clean up the machine marks.

While you still have the file out, round both ends of the head (Figure 3). Start in the center and work toward each side.

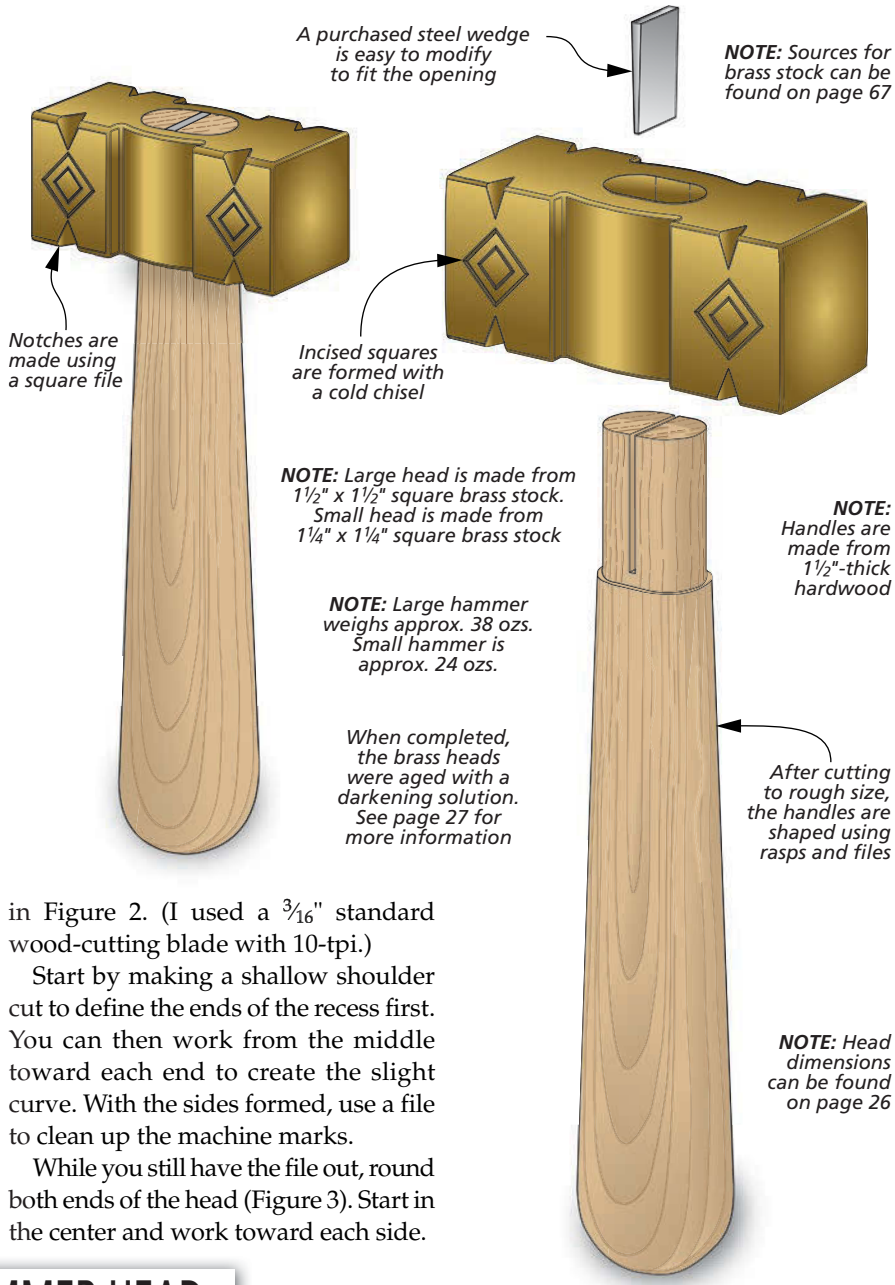

How-To: SHAPE THE HAMMER HEAD

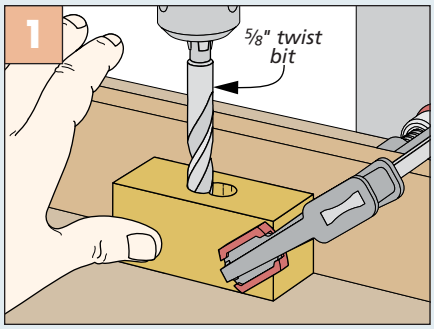

Open the Eye. Drill two overlapping holes to form the ends of the eye. Lubricate the bit periodically.

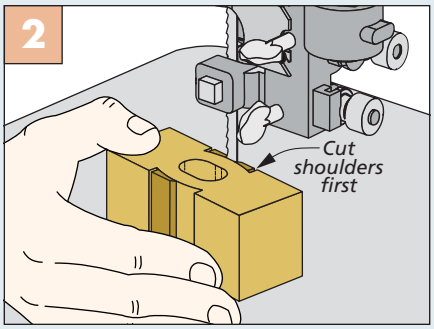

Shape the Sides. Cut the sides of the head to shape at the band saw. Clean up the saw marks with a file.

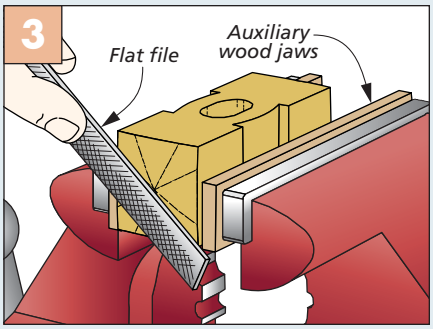

Round Ends. Starting from the center, make strokes toward the outer edges. Keep rotating the head in the vise.

Completing the HAMMERS

Now that you have the general shape of the hammer head completed, it's time to move on to the next phase. And that's adding the unique shapes and embellishments that give the brass head a personal touch.

For the large and small hammer heads that began on the previous page, the design details and dimensions for both are shown at right. If, however, you opted for one of the alternate designs shown at left, you can go to *Woodsmith.com* to find the details for creating them. They're both made from the same sizes of brass stock, and simply require a few slight modifications to the initial shaping shown on page 25.

Woodsmith GO ONLINE EXTRAS

For additional decorative patterns, go to Woodsmith.com

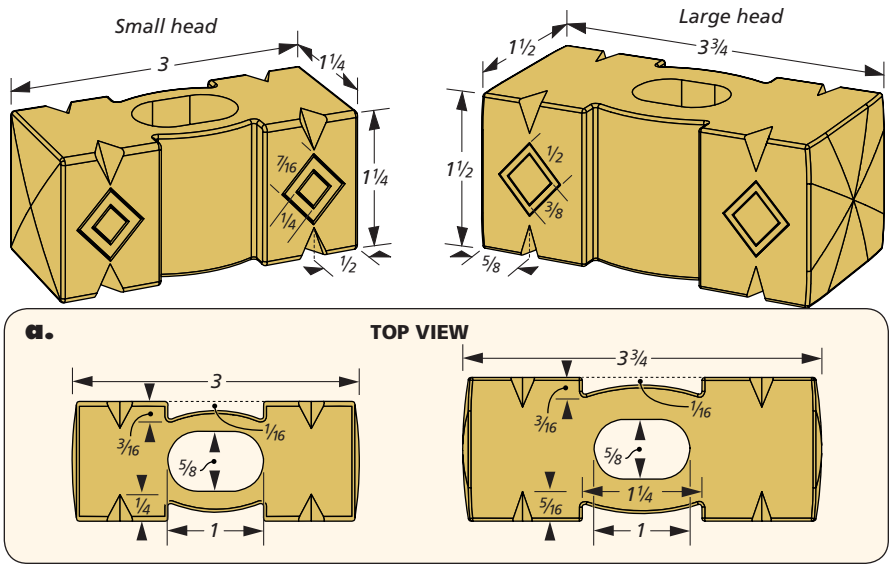

ROUND OVER EDGES. Before starting in on the design work, I decided to round over all of the edges first (Figure 1, below). You may need to use several different sizes of flat files to reach some of the tighter spots, particularly around the cutouts on the sides of the head. These roundovers don't need to be severe, rather just enough to break the sharp edges.

ADDING FLAIR. Next up, you'll use files and punches to create the designs that give the heads their unique look. For the eight notches cut around the perimeter of the head, I turned to a square file, as shown in Figure 2 below.

There's no real secret to making these shapes. Just be sure that the head is held securely in a vise, and hold the file at a 45° angle as you make each forward stroke. With the file balanced on one corner, remove material until you get close to the depth shown in detail 'a,' above. Don't be overly concerned about hitting the exact depth. Concentrate more on making all of your notches look the same for best results.

DOUBLE SQUARES. Moving along from the finesse work, you'll now need to use a little bit of brute force for the next part. And that's creating the incised square patterns. Instead of removing material like for the notches, you'll actually be compressing the brass to form the shapes with a series of blows using a cold chisel and hammer (Figure 3).

I used a simple flat chisel, but there are other cold chisels that would work, as well. I spent some time practicing on a piece of scrap brass so I knew how hard to strike the chisel before turning

How-To: EMBELLISH THE HEADS

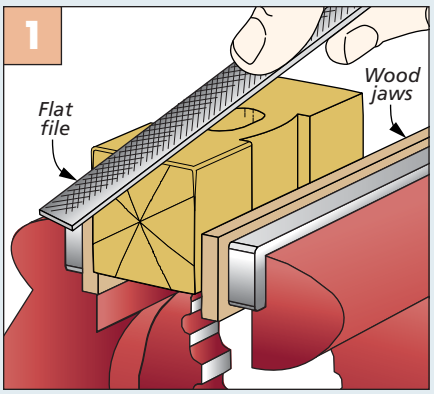

Round Over Edges. Use a flat file to ease the sharp edges. A couple different size files may be needed here.

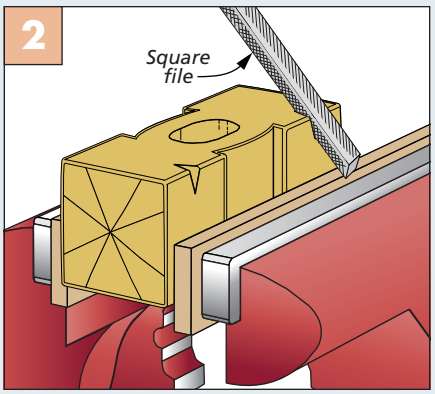

Create Notches. A square file works well to make the decorative notches on the edges of the brass head.

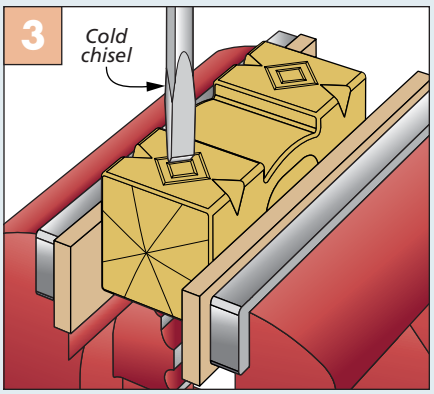

Incised Design. The tip of a flat cold chisel is perfect for creating the square designs on the sides of the head.

loose on my project piece. A marker can be used to lay out the square shapes on the head and give a clear aiming point for the chisel and hammer.

HARDWOOD HANDLE

With the finished hammer head in hand, you're on the home stretch. Now you can turn your attention back to a little woodworking to create the handle. Much like the hammer head, the handle requires a fair amount of shaping with hand tools. So start by cutting your blank to size. The dimensions for both sizes are shown at right.

SHAPING. The How-To box below walks you through the steps to bring the handle into shape. I'll just point out a couple of things. First, the tenons are cut at the table saw. After making the shoulder cuts, I used a tall auxiliary fence and support block to hold the piece upright while cutting the cheeks (Figure 1). Leave the tenon square for now. You'll shape it to fit the eye in the head shortly.

TAPERING. The second point is about the overall tapered shape of the handle. I cut mine to rough shape at the band saw (along with cutting the wedge kerf), as shown in Figure 2. I then used a rasp and file to finish it up (Figure 3). There's no right or wrong way to shape the handle here. You just want to end up with a handle that feels comfortable in your hand. I also filed the tenon edges until the handle fit in the hammer head.

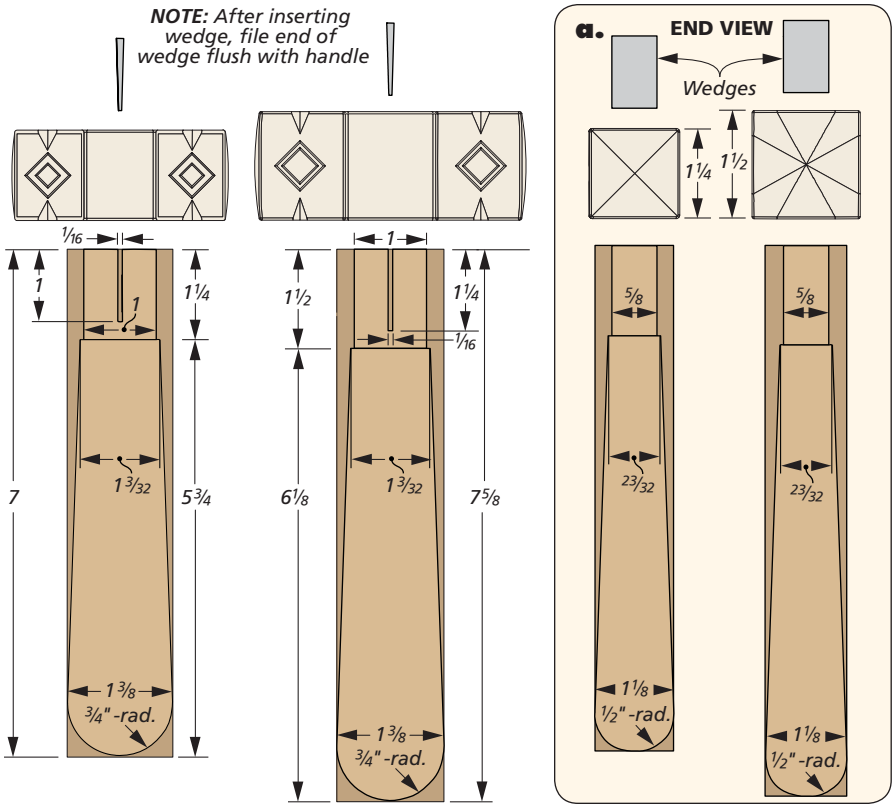

FINAL DETAILS. All that's left is to tap the steel wedge into the kerf to secure the handle. I bought my wedge at the hardware store and ground one edge to fit the 5/8" opening of my hammer.

As you can see in the main photo on page 24, my finished hammer heads are a bit darker than what you're holding now. And that's because of a darkening solution that I applied to mine to age the brass and give it an antique look. I waited to apply the solution until after the handle was completed and installed in the head, though. This way, the end of the handle and the wedge are treated at the same time. To find out more about the solution I used, check out Sources on page 67. After the solution is applied and has dried, this tool is ready to work. W

How-To: CREATE THE HANDLES

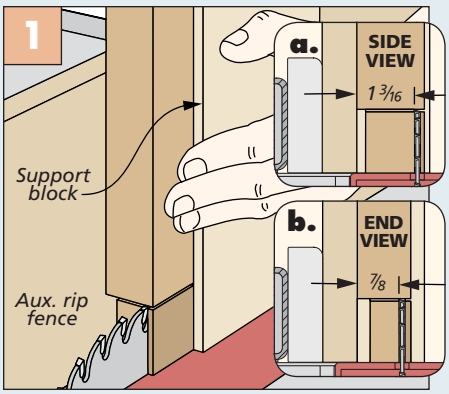

Form Tenon. With the handle blank square, form the shoulders of the tenon at the table saw.

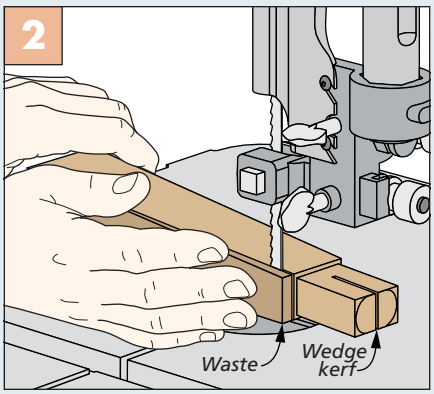

Taper Handle & Cut Kerf. The band saw makes quick work of tapering the handle and cutting the wedge kerf.

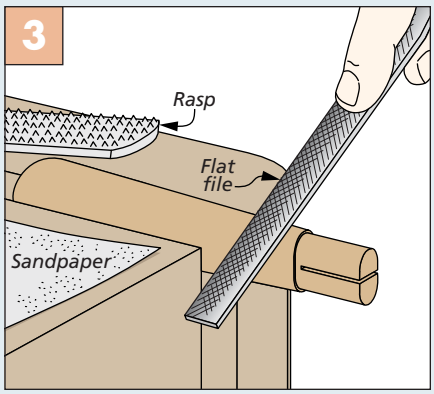

Rasps & Files. Remove the bulk of the material with a rasp, then switch to a finer file. Finish up with sandpaper.

Outdoor Project

garden Tower

Pump up the visual interest of your yard or garden this season with this one-of-a-kind cedar structure.

If you're looking to add an eye-catching focal point to your outdoor living space this year, then this garden tower is sure to fit the bill. Made from inexpensive, durable, and great-looking dimensional cedar boards, the design is guaranteed to gain the attention of your friends and neighbors.

A PARISIAN TRIBUTE. At first glance, I'm sure this wood "yard art" is reminiscent of another, much larger famous structure that belongs to our French friends across the pond. Though its design shares a few similarities with that famous tower in Paris, you should be able to handle this one quite easily over the course of a few weekends in your woodworking shop.

DETAILS OF THE DESIGN. That's not to say this unique project isn't without its challenges, however. One look at all those angles, and you can see where I'm going here. But don't worry, you won't have to brush up on your geometry before calculating all the different angled dadoes, miters, and rabbets in this project. I've come up with a "cut to fit" method of building the tower that simplifies things quite a bit.

Construction Overview / OVERALL DIMENSIONS: 25¼"W x 86⅞"H x 25¼"D

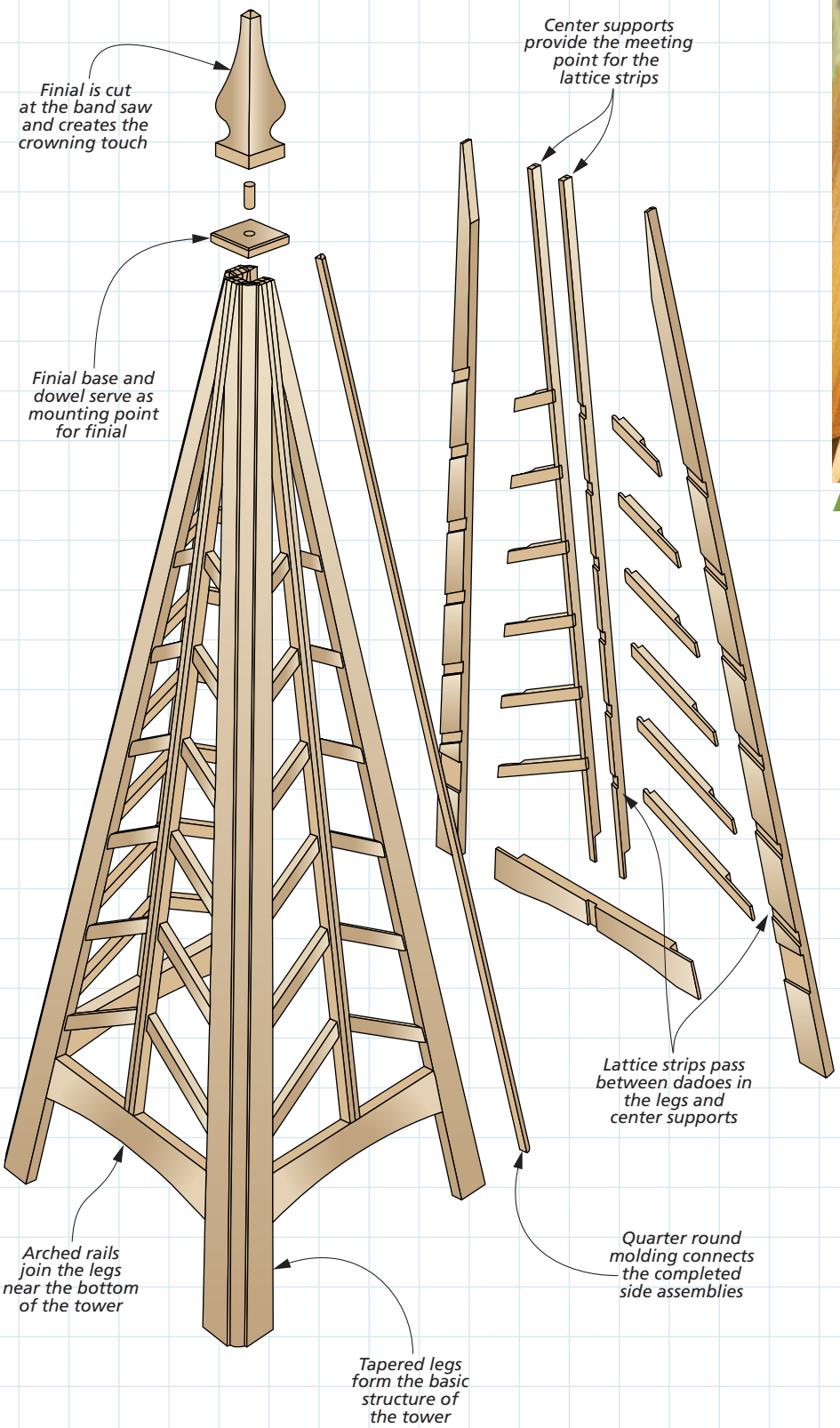

▲ The angled lattice strips form the "ribs" of the tower. You can find our "cut to fit" method for flawless results on page 32.

Woodsmith GO ONLINE EXTRAS

For a full-size finial pattern, go online to Woodsmith.com

▲ The finial is the crowning touch for the cedar tower. It only requires a few band saw cuts as shown on page 35.

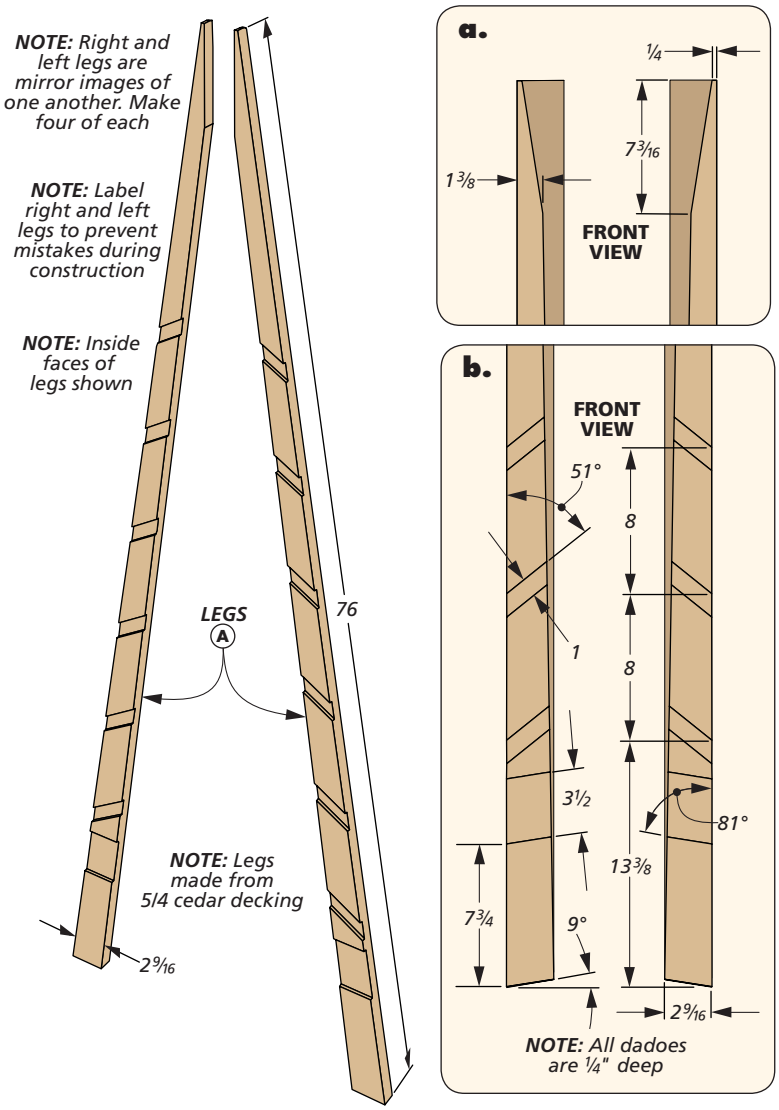

Start with the **LEGS**

The place to begin your work on the garden tower is with the legs. There are eight legs total: Four right legs and four left legs. And as you can see above, these aren't your ordinary furniture legs. They're tapered from top to bottom and feature angled dadoes to hold the lattice strips, as well as a wider angled dado at the bottom to accept the rail.

LEG BLANKS. This may all sound a little overwhelming, but it's easy to make the legs by tackling them one step at a time. And that starts with making blanks from cedar decking that match the overall length and width of the legs. You can see the blanks for the right and left legs in details 'a' and 'b' above. Make sure to remove the rounded edges of the decking as you're sizing the blanks. Then lay out the shape and dado locations, and finish up the blanks by trimming the miters at the top and bottom of each.

DADOES. The six angled dadoes on each leg that hold the lattice strips are the next order of business. You'll notice that they're all 1" wide and equally spaced from one another. Also, the dadoes on the right legs are mirror images of those on the left. These cuts would

How-To: SHAPE THE LEGS

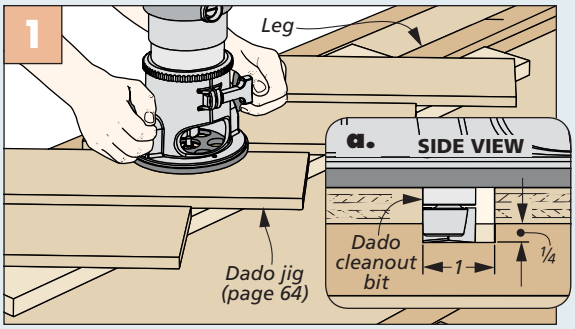

Dado Jig. This simple dado jig works with a dado cleanout bit in your router to cut three dadoes at a time. Details for building it are on page 64.

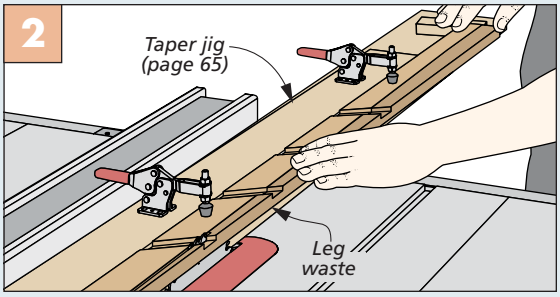

Long Tapers. To ensure smooth cuts and consistent results from leg to leg, I made a jig for the table saw for cutting the long tapers.

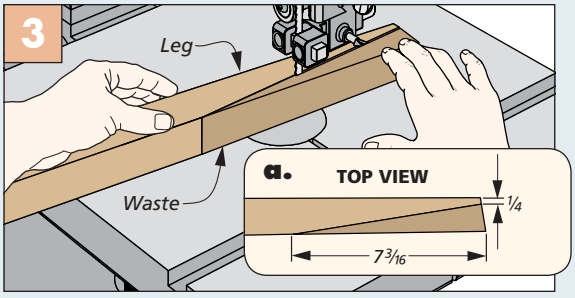

Short Tapers. For the second tapers where the legs come together at the top, cut them carefully at the band saw before sanding them smooth.

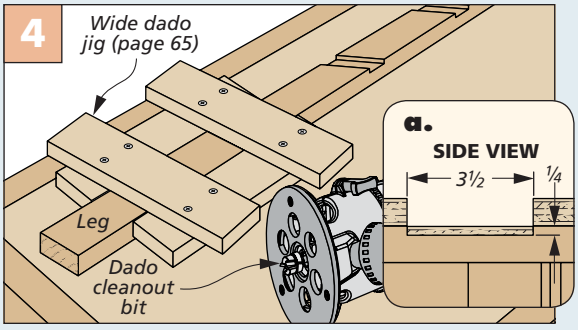

Wide Dadoes. This router jig is similar to the one shown above but wider. Use care when routing so that the router doesn't tip into the wide opening.

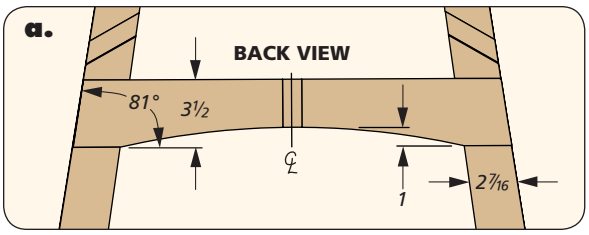

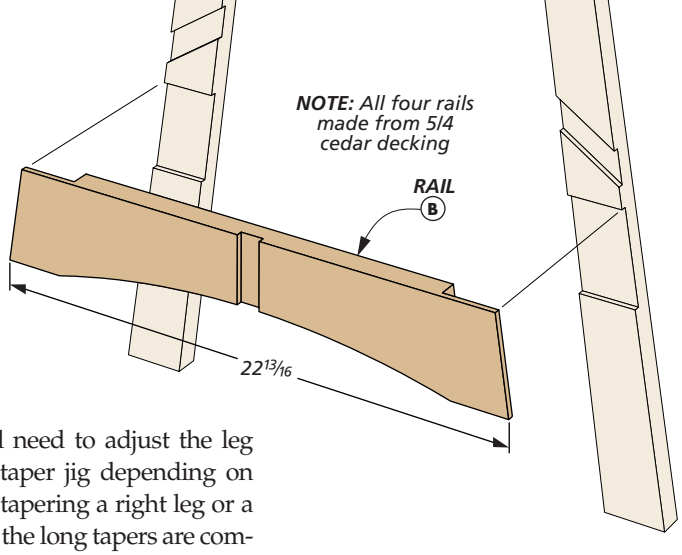

be a tough task at the table saw, so I made a couple of mirror-image jigs that can be used to rout three of the dadoes at a time (Figure 1, previous page). The jig details are in Shop Notes on page 64.

TAPERS. With all the dadoes for the lattice strips cut, the next step is cutting the long taper on each leg. With a taper of this length, it's tough to get the precision needed with a band saw. So I opted to make a simple taper jig for my table saw. This is shown in Figure 2 on the previous page and in Shop Notes on page 65. Note that you'll need to adjust the leg position in the taper jig depending on whether you're tapering a right leg or a left leg. Once all the long tapers are complete, the shorter taper at the top of each leg is accomplished with a simple band saw cut (Figure 3, previous page).

WIDE DADOES. There's one other pair of mirror-image jigs to build for these legs, and those are used to cut the wide dadoes for the rails near the bottoms of the legs. The jig is shown in position in Figure 4 on the previous page, and the details for building it are in Shop Notes on page 65. At this point, the legs are complete, and you can turn your attention to the rails that join each pair of legs.

How-To: ADD THE RAILS

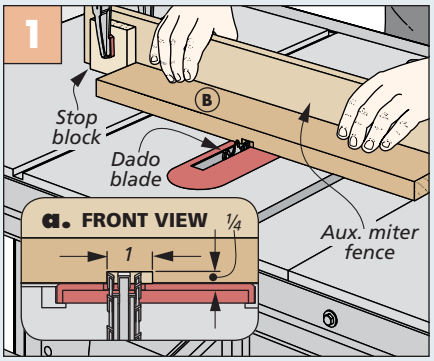

Center Dado. Position the rail slightly off-center, so you can flip it end for end between cuts to center the dado.

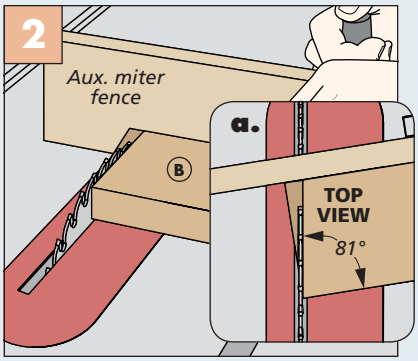

Miters. After setting the miter gauge at the proper angle, trim the miter on one end of each rail.

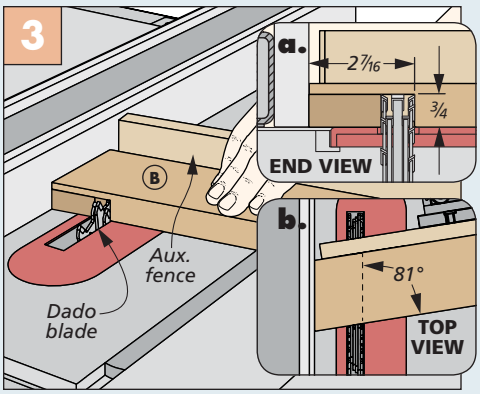

First Rabbet. Now switch to a dado blade to cut out the rabbet on one end of each rail, starting with the shoulder.

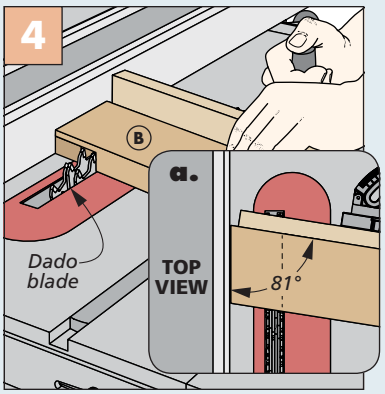

Second Rabbet. Reverse the miter gauge setting to cut the miter and rabbet on the opposite end.

RAILS

Like the legs, the rails are made from cedar decking. You'll get started by cutting the four rails to their overall dimensions, again removing the rounded edges of the boards.

CENTER DADO. The first order of business on the rails is the center dado. Later on, this dado accepts a pair of center supports that run vertically up each side of the garden tower. Cutting this dado is a simple two-pass process, as shown in Figure 1 at left.

MITERS & RABBETS. You'll notice that the two ends of each rail have miters and rabbets that are mirror images of each other. This requires two mirror-image miter gauge setups to cut them. However, this isn't a difficult process. Just tilt your miter gauge (with an auxiliary fence) to the appropriate angle for one of the miters and rabbets, and make the miter cut on one end of each rail first (Figure 2). Once that's done, switch to a dado blade to cut the wide rabbet on each rail in multiple passes, starting with the shoulder cut first (Figure 3).

Now it's just a matter of reversing your miter gauge setting and repeating the process on the opposite end of each rail, as shown in Figure 4.

ARCS. The last element on each rail is a subtle arc along the bottom (detail 'a' above). Cut just outside the layout line at the band saw and sand it smooth.

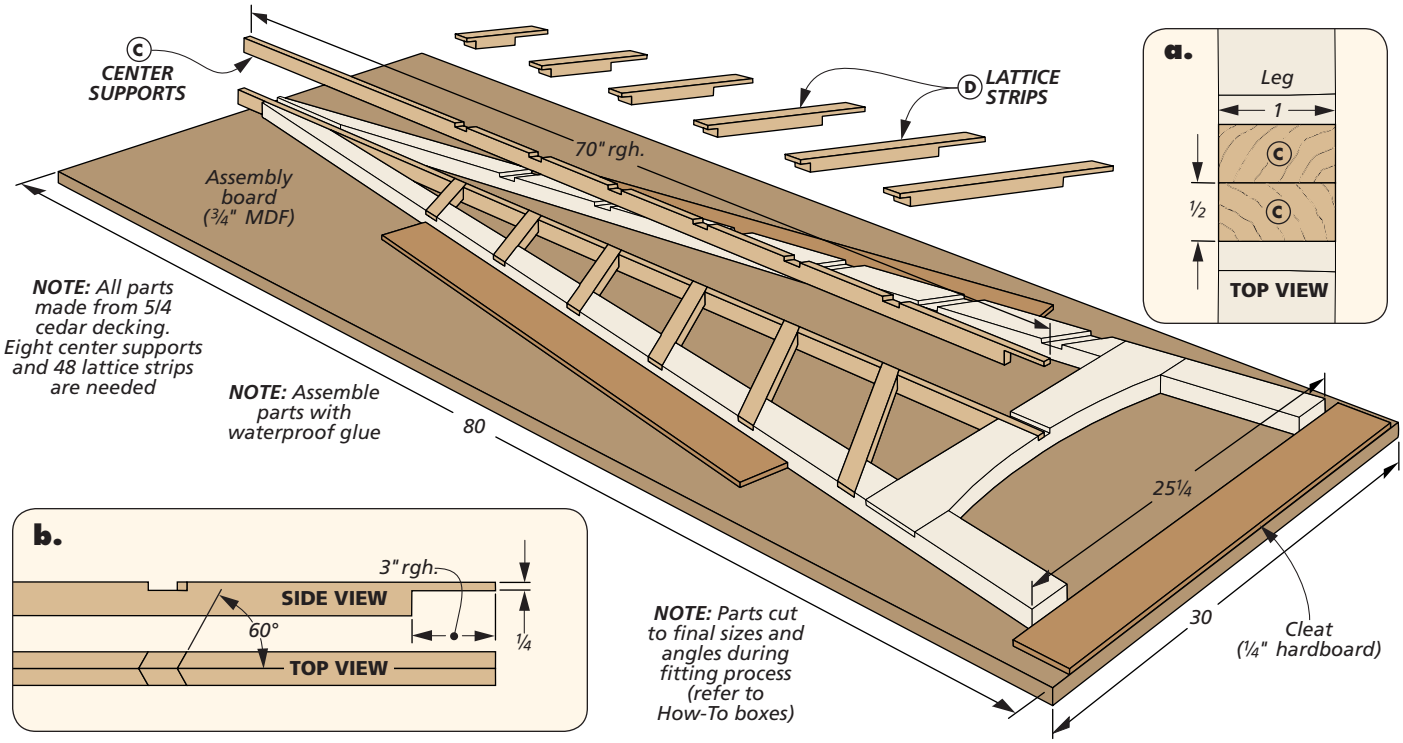

Assembling a TOWER SIDE

The next two parts to add to the garden tower are the vertical center supports, and then the lattice strips that form the "ribs" of the structure. There are quite a few angled cuts involved with putting this all together correctly, so I employed a bit of a different approach for assembling each side of the garden tower. As you can see in the drawing above, it involves laying out the components of a side on an assembly board and cutting each part to fit as you add it to the assembly.

CENTER SUPPORTS

The work begins with the center supports, which are 1" thick and just ½" wide. Because of this, it's easiest to prepare an extra-long blank that's wide enough for a couple of strips, and then cut the wide rabbet that will fit over the rail along the bottom of the blank (Figure 1). I actually cut this rabbet a bit wider than needed. This way, it's easy to trim by hand to match the arc on the bottom of the rail later on. With the rabbet complete, you can rip the center supports to the final overall width.

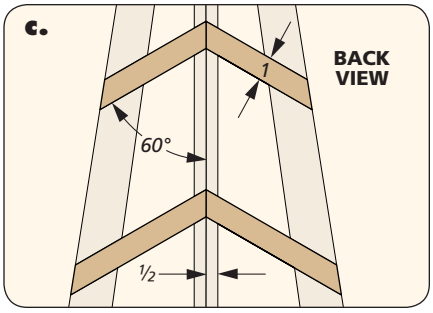

CENTER SUPPORT DADOES. As you can see in detail 'c' above, each center support requires angled dadoes that are the

How-To: FORM THE CENTER SUPPORTS

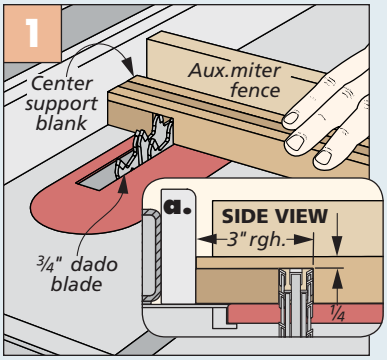

Rabbet Blank. Pass the center support blank over a dado blade, forming the shoulder first.

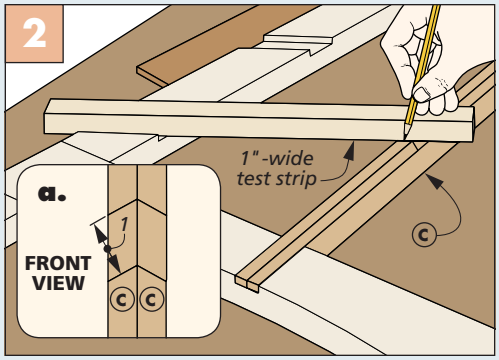

Lay Out Dadoes. The easiest way to ensure accuracy with all the center support dadoes is to use a test strip to help lay them out.

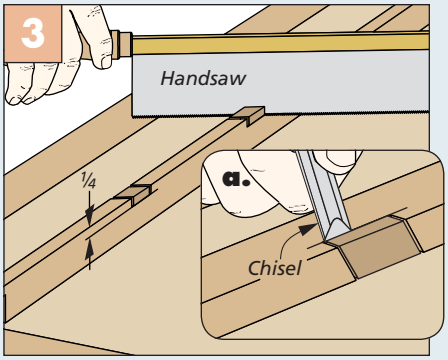

Saw & Chisel. The strips are so narrow that it's easy to complete the dadoes with some hand tool work.

mirror image of the support right next to it. The easiest way to cut these accurately is to put a whole side together on an assembly board (shown on the previous page), and then use a test strip to lay out the dado locations on the center supports (Figure 2, previous page). Then you can cut them with a handsaw and chisel (Figure 3).

LAYOUT FOR LATTICE STRIPS

Now you're ready to turn your attention to the lattice strips that fit the dadoes in the legs and the center supports. There are 12 strips for each side, 48 in all, so you can get started by ripping a number of extra-long strips for the "cutting and fitting" portion of the process that's coming up next.

Each lattice strip is a different length. And due to the taper on the legs, they also have a different angle of miter cut on the outside end of each. However, following this layout and cutting procedure should simplify the process.

CENTER MITERS & RABBETS. One thing that's consistent on each lattice strip is the angle of the miter and rabbet where they meet on the center supports (detail 'c', previous page). So after setting up your miter gauge at the proper angle, you can trim that miter and then switch to a dado blade for cutting the rabbets (Figures 1-3 below). Note that you'll need to rotate the miter gauge the opposite direction to cut the miters and rabbets on the mating strips.

OUTSIDE MITERS & RABBETS. The outside miters and rabbets, of course, are a little trickier. The legs are tapered, which means each miter is a slightly different angle, and each rabbet will be a different size. However, you can ease the process by laying all the strips into the assembled side on your assembly board. Then mark and cut the outside miter on each, as shown in Figure 4 below.

The angle on the shoulder of each rabbet will be consistent on all the lattice strips. But the overall width of the rabbet will differ. To tackle this, mark the location of each rabbet shoulder as indicated in Figure 5. Then you can rotate your miter gauge to match the shoulder angle, and line up the shoulder line with the dado blade. Cut the shoulder of each rabbet first (Figure 6), before sliding the strip in order to remove the rest of the waste with a few more passes over the blade.

REPETITON. You're finally ready to glue and clamp all the pieces of the tower side together. Of course, there isn't just one side of this garden tower, but four. So you'll need to repeat the process again for the other sides of the project.

How-To: ADD THE LATTICE STRIPS

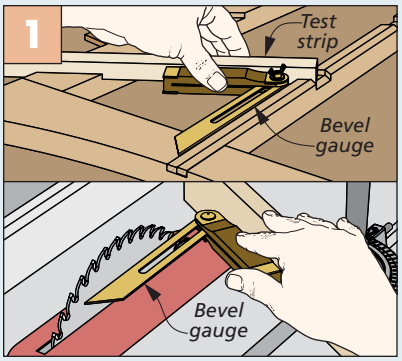

Position Miter Gauge. Use a sliding bevel gauge to position the miter gauge for the center miters.

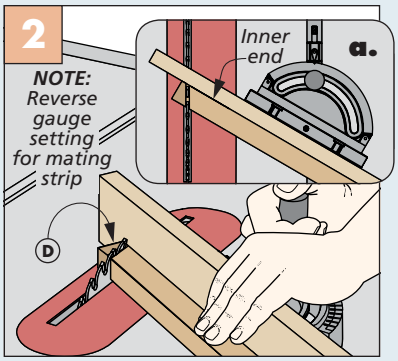

Miter. Now you can trim the miters on the lattice strips where they'll meet in the middle.

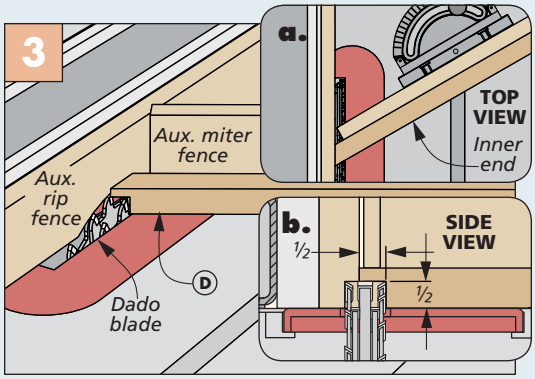

Rabbets. Switch to a dado blade, and cut the rabbet on the end of each lattice strip using the same miter gauge setting.

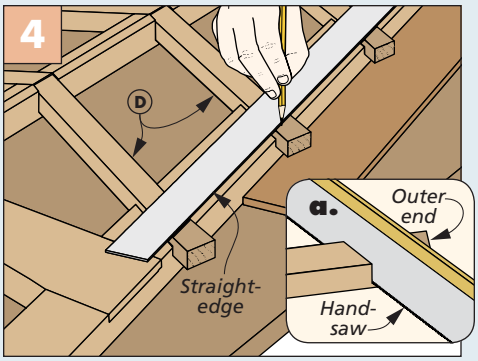

Outside Miters. Place all the lattice strips into the assembled side, and then mark and cut them to final length.

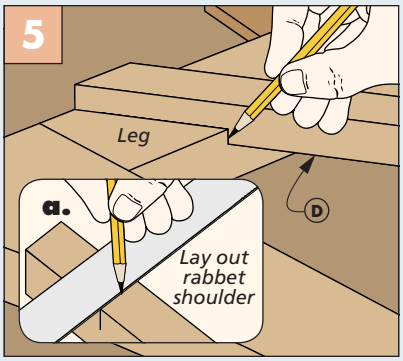

Rabbet Layout. Now reinsert the lattice strips, and lay out the rabbet locations on each one.

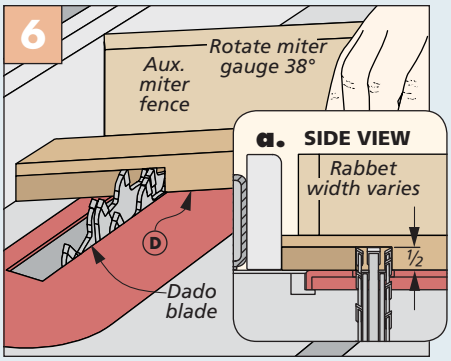

Rabbets. The final step on the lattice strips is to cut the rabbet that will fit in the legs on each one.

Putting it all TOGETHER

At this stage, you should have four assembled tower sides. All that's left is putting them all together with the help of some quarter-round molding, and then adding the crowning touch — the finial base and finial.

QUARTER ROUND. If you look at detail 'a,' you'll notice that the sides of the tower don't overlap. Rather, they meet corner to corner. The holding power between the sides is provided by the strips of quarter-round molding that fill the openings between the sides.

Making this quarter round isn't difficult. You just set up a ¾" roundover bit in the router table and pass both edges of a ¾"-thick cedar board through it. After ripping those strips to ¾" wide, repeat the process to make a total of four strips. I left them extra-long at this point.

TOWER ASSEMBLY. With the quarter round in hand, you can glue and nail the strips to two of the sides, flush with the inside edges (Figure 1, following page). Use stainless steel finish nails, so that they won't rust or stain the cedar.

Next you can clamp the entire tower assembly together with it lying on one side, as shown in Fig. 2 on the next page. Once it's all aligned, glue and nail on the top side. Now flip the entire assembly over in order to glue and nail the final side in place. With that done, you can trim any excesss off the end of the quarter round, so it lines up flush with the top and bottom of the tower.

FINIAL PLATE & FINIAL. The final touch on the garden tower is a decorative finial mounted to a base. The base is nothing more than a square made from cedar. You'll round the edges with a ⅛" roundover bit and then drill a centered hole for a dowel used to mount the finial, refer to detail 'b' above.

The finial is a little more elaborate. It's cut to shape on the band saw. (There's a full-size pattern available online at *Woodsmith.com*). But first, you'll want to drill the hole in the bottom of the finial blank for the dowel while it's square (Figure 3, next page).

Cutting the finial isn't as difficult as it looks. Start by cutting out the shape on two opposing sides, as in Figure 4. Then reapply the cutoffs with double-sided tape before cutting the other two sides (Figure 5). A little sanding completes the work on the finial.

GETTING THE TOWER GARDEN-READY. The top of the tower where the four sides come together is likely not completely flat, but you can take care of that with some sandpaper. Then nail on the finial base, and use a dowel and glue to secure the finial. Now all that's left is finding the perfect spot in your yard or garden for your new piece of artwork. It's sure to start some conversations at your next outdoor gathering. W

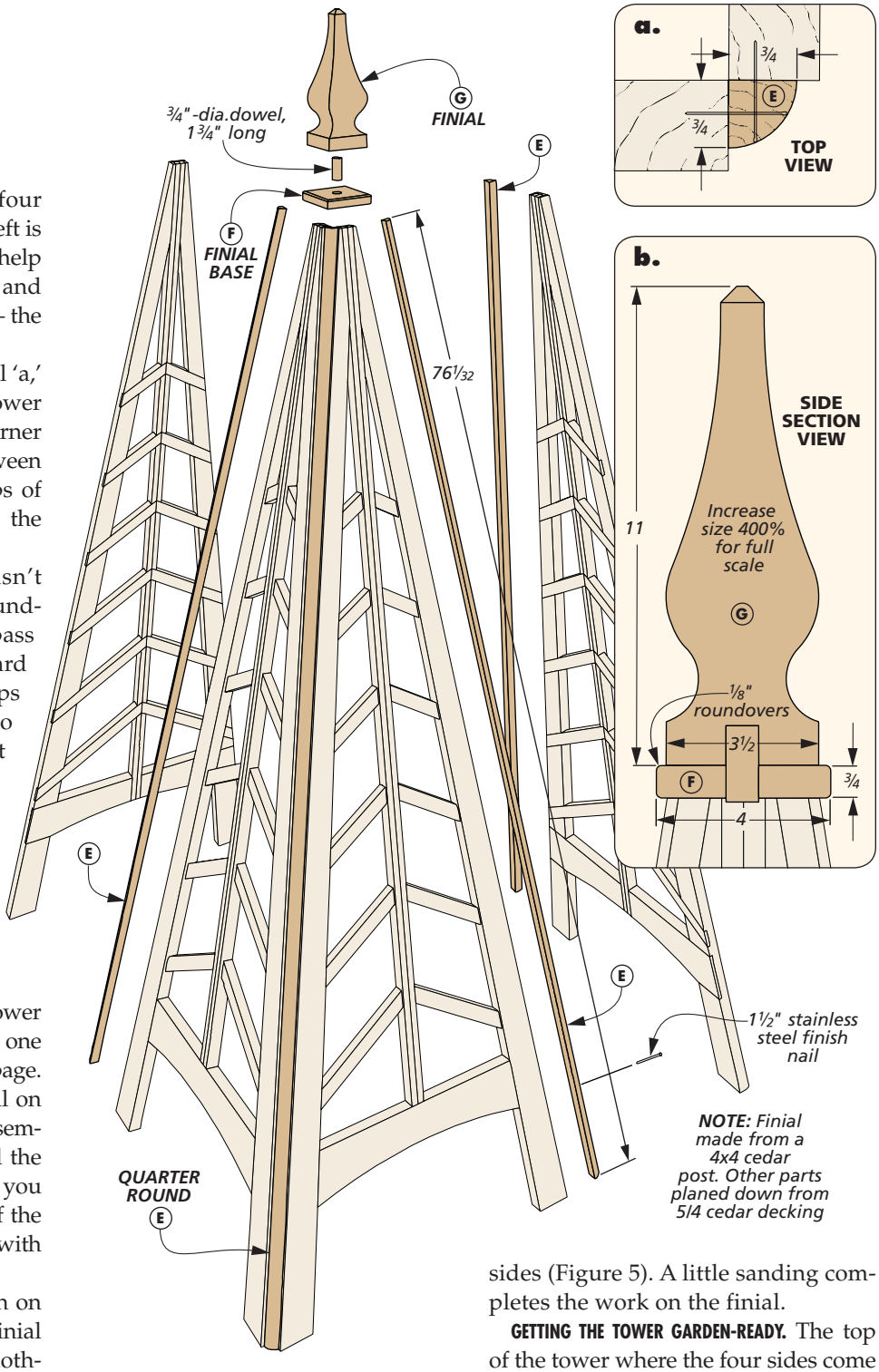

How-To: ASSEMBLE THE TOWER

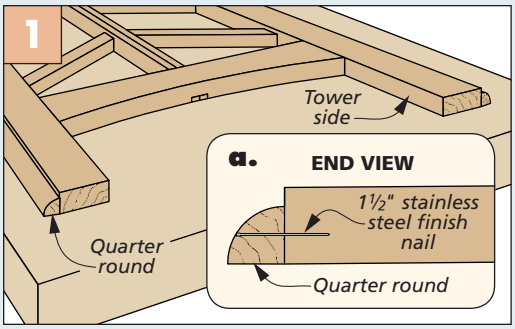

Quarter Round. Start by gluing and nailing the quarter round molding to two sides of the tower. Use stainless steel finish nails.

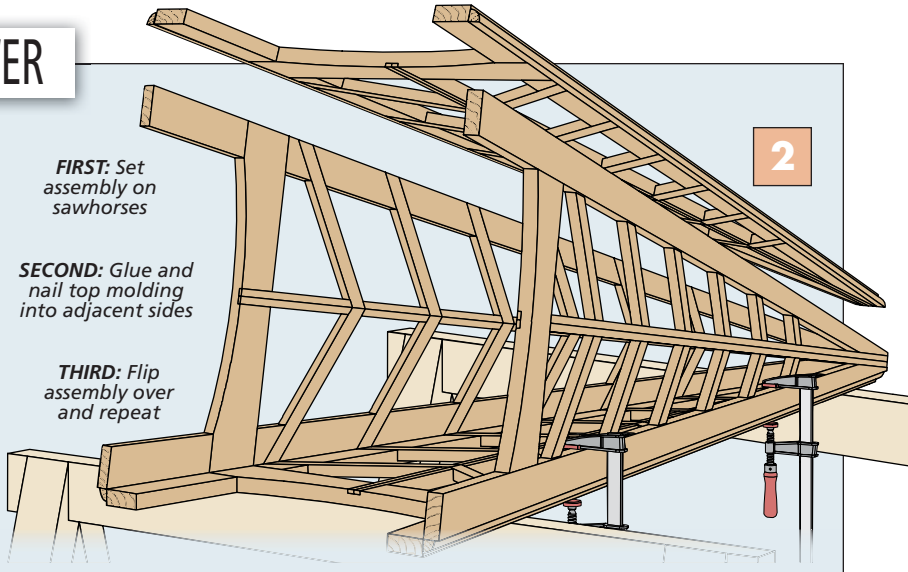

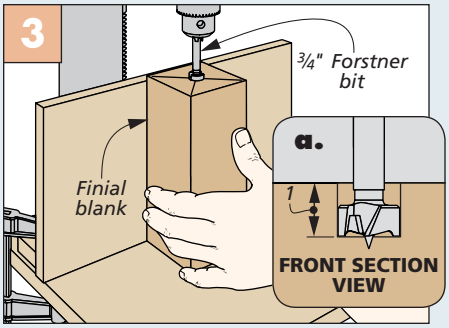

Dowel Hole. Support the finial blank with a tall drill press fence while boring the hole for the dowel.

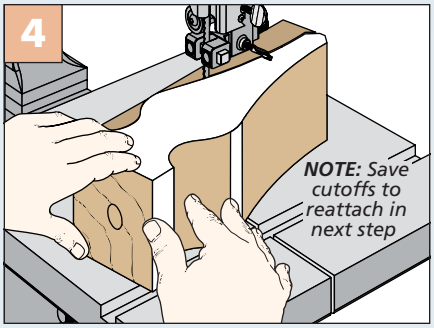

Cut to Shape. Apply the pattern, and cut along two sides of the finial at the band saw to form the shape.

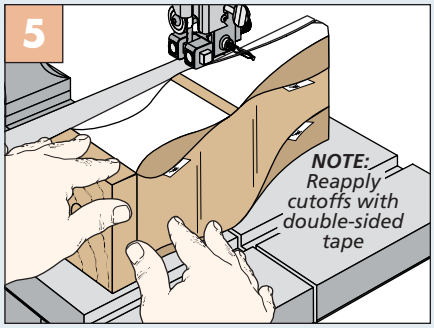

Final Cutting. After taping the cutoff pieces back to the blank for support, you can complete the finial.

Materials, Supplies & Cutting Diagram

A	Legs (8)	1 x 2 9/16 - 76	**E**	Quarter Round (4)	¾ x ¾ - 80 rgh.	•	1½" Stainless Steel Finish Nails
B	Rails (4)	1 x 3½ - 22 13/16	**F**	Finial Base (1)	¾ x 4 - 4	•	(1) ¾"-dia. Dowel
C	Center Supports (8)	1 x ½ - 66 7/16	**G**	Finial (1)	3½ x 3½ - 11		
D	Lattice Strips	1 x ¾ - 575 rgh.					

5/4 x 6" - 84" Cedar Decking (Four Boards)

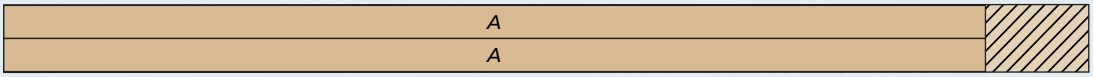

5/4 x 6" - 96" Cedar Decking

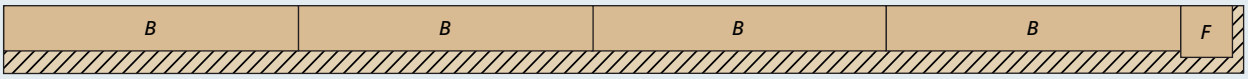

5/4 x 6" - 72" Cedar Decking

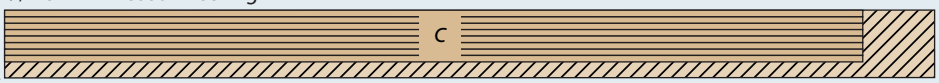

4x4 - 12" Cedar

5/4 x 6" - 96" Cedar Decking

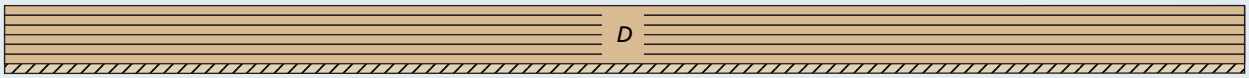

5/4 x 6" - 96" Cedar Decking

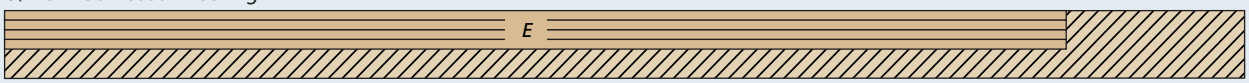

Shop Project

modular Storage Boxes

If you're looking to organize the tools in your shop, this system of multi-sized boxes and mobile storage cases will serve you well.

Over time, I've amassed a wide array of tools that come in all shapes and sizes. In addition to the tools you'd expect to find in a woodworking shop — things like routers, drill, and saws — there are also the tools I use around the house to complete those Saturday chores.

It seems like wishful thinking, but it would be nice to organize all these tools in one place. Well, there's hope on the horizon. These shop-built boxes fit the bill and come in three sizes. They travel well and are surprisingly stout for as lightweight as they are. To store the modular boxes, I also built a case that is just as strong and versatile. It can be mounted to the wall and used as a work-surface. Or, you can throw a set of casters on the case and go mobile. Either way, the modular designs of the box and case are sure to suit your needs.

Construction Overview / OVERALL DIMENSIONS: 19¾"W x 35¹⁵⁄₁₆"H x 14¼"D (w/casters)

Handle folds down flat in pocket

Plywood top and hardwood frame combine for a strong lid

Hardwood corners bolster case construction

Tray cleats make it simple to customize box configuration

Full-extension drawer slides give full access to boxes

Secure latches ensure a spill-proof box

Hardwood plates reinforce the corners

Hardwood corners protect the boxes from damage

Hardwood tray sides give full support to boxes

Heavy-duty casters allow you to easily roll the storage boxes around in your shop

Finger pull in tray provides easy access to boxes

Content plate identifies what's inside

11

8

5

NOTE: Three box heights provide plenty of tool storage options

▲ The boxes are great for storing all your tools. The interiors can be customized for a wide range of accessories.

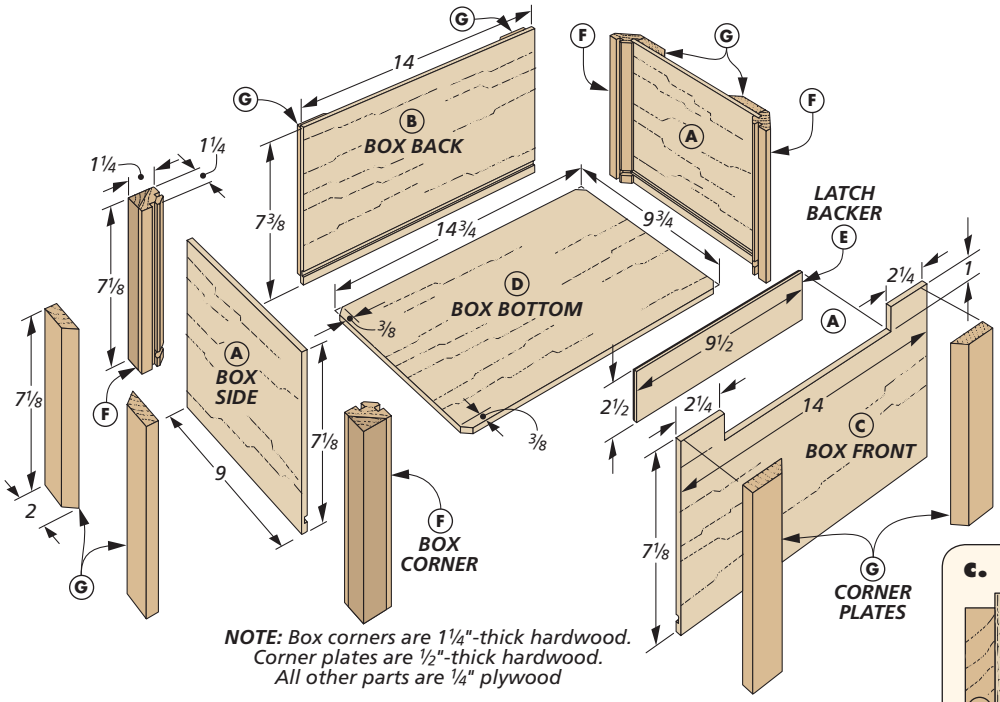

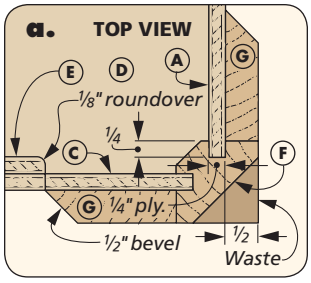

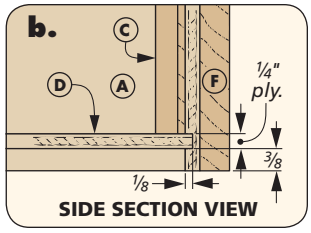

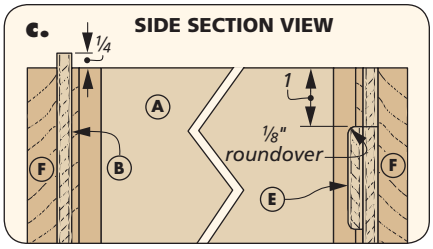

Start with the **BOXES**

As the main drawing above shows, the combination of hardwood corners and ¼" plywood make for a lightweight tool box that's strong. The lid that's built later is independent of the box. All the boxes are identical in width and length, but can be made in one of three different heights. For the sake of simplicity, I'm showing the medium-sized box here. If you want to make the other two boxes, it's just a matter of adding or subtracting three inches to the height.

PLYWOOD FIRST. The shell of the box is comprised of six pieces of ¼" plywood. I kicked off the process by cutting all of these parts to their final size. This is pretty straightforward with one little speed bump to note. For the purpose of mounting the lid to the box, the back is taller than the sides and front by ¼", as shown in detail 'c'. The rest of the work on the plywood will be done in a little while. But for now, lets move on to making the hardwood corners.

CORNERS. To start off, all the material for the box corners is cut from 8/4 hardwood stock and planed to final thickness. Having the large square corners will aid in gluing up the boxes perfectly square. Later, each of the square corners will be beveled. Also, I left each blank a little longer than the length of two corners. This made for quicker work than milling each corner separately. I cut them to length after finishing the joinery.

How-To: CUT & SHAPE THE CORNER PIECES

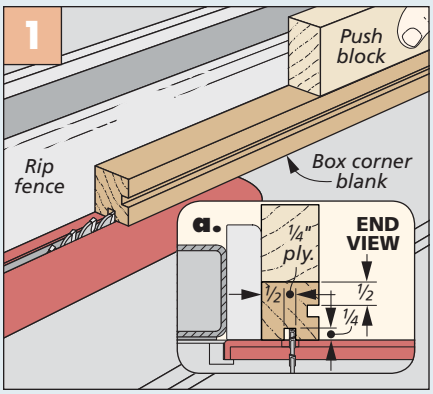

Grooves. Use a piece of plywood to determine the final width of the grooves in the corner blank.

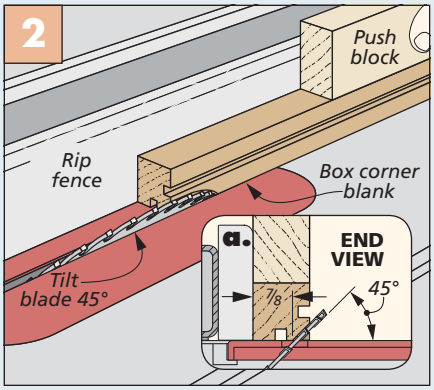

Interior Bevel. Tilt the table saw blade 45° to cut the small bevel that's on the inside of the corner blank.

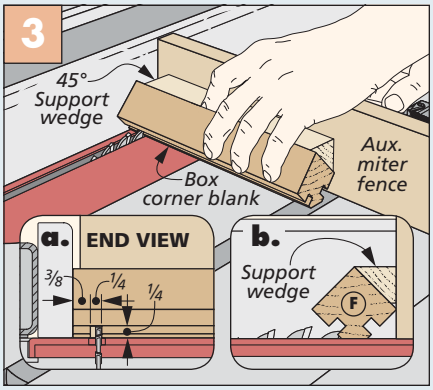

Cut Grooves for Bottom. First, cut the corner to final length. Then cut the groove for the plywood bottom.

GET YOUR GROOVE ON. Figure 1 on the previous page shows you how to cut the two grooves that house the sides, front, and back. Here, as with fitting all the joinery on the box, using a standard blade is the best bet. You want the plywood to fit snug in the corners, so sneak up on the width of the groove.

Moving forward, I tilted the blade to make a small bevel on the inside corner (Figure 2 on previous page). With that finished, it's time to turn your focus to the groove for the plywood bottom (Figure 3).

The front, back, and sides of the box are also grooved to hold the bottom. But these grooves are only ⅛" deep, so you'll have to lower the saw blade, as shown in Figure 1 at right.

NOTCH FRONT. If you take a look at the plywood front in the main drawing on the previous page, you'll see that it has a large notch at the top. This is for the front of the lid to rest in. Cutting these notches is easily done with a dado blade. I made the shoulder cuts first, then nibbled away the center of the opening (Figure 2). If you're making multiple boxes, you could clamp a stack of these together to save time.

CORNER PLATES. All of the corners are buttressed on either side by ½"-thick hardwood plates as in detail 'a' on the previous page. These plates add rigidity to the box, Figure 3 at right shows how to make these pieces.

STAGED ASSEMBLY. Attempting to assemble the box all at once is a challenge you don't have to take on. To get the assembly process off on the right foot, start by gluing the corners to the box sides (Figure 4). Just make sure that the corners stay parallel to each other while the glue sets. When the glue is dry, it's time to add the corner plates to the assembly.

GLUE UP THE BOX. After the sides are assembled, there's just one more task before you're ready to glue up the box and that's to trim the corners of the bottom panel so it fits in the grooves. As you're clamping the box up, check for square and use just enough pressure to avoid bowing the plywood panels (Figure 5). Once you've removed the clamps from the box, you can add the remaining corner plates.

How-To: SHAPE PARTS & ASSEMBLE BOX

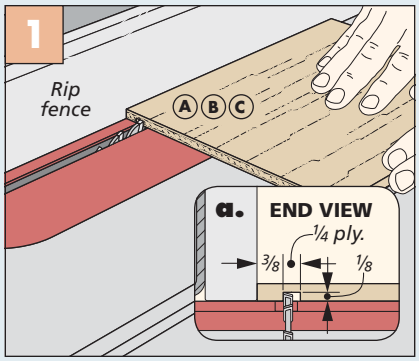

Grooves for Bottom. Apply even pressure when cutting the shallow grooves in the plywood.

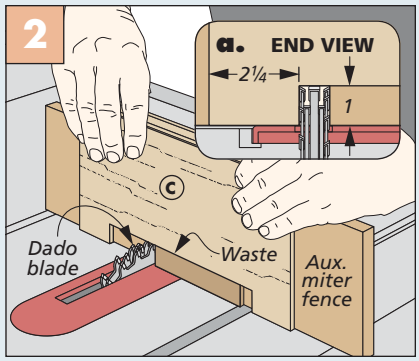

Notch in Front. The notch in the plywood front is easy to cut at the table saw with a dado blade.

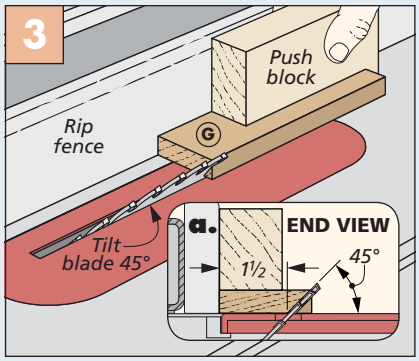

Corner Plate Bevel. After making the bevel cuts on the plates, sand out any burn marks before the next step.

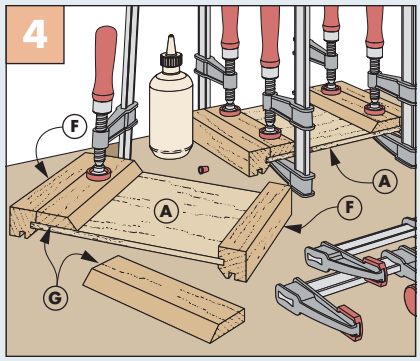

Glue Up Sides. First, glue the corners to the sides. When gluing on the plates, clamp them to the plywood.

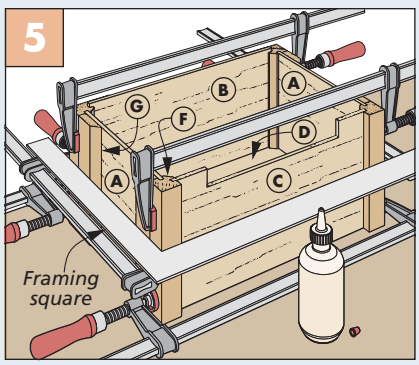

Glue Up Box. As you add clamps, check for square. Too much pressure can bow the sides of the box.

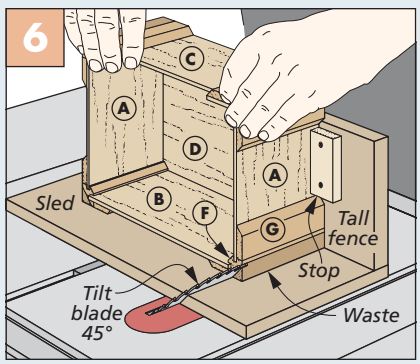

Cut Large Bevel. A sled makes easy and safe work of cutting the bevels on the corners of the box.

Now turn your focus to cutting the large outer bevels on the corners. To cut them, I made a sled that attaches to my miter gauge, as in Figure 6. To build the sled, check out Shop Notes on page 66. This is a good time to sand the box smooth. And to ease the bottom edges of the box, I used a ⅛" roundover bit.

INSTALL LATCH BACKER. One final thing, glue a plywood latch backer in place flush with the notch you cut earlier (main drawing, previous page). This provides a solid area to mount the latches that you install later. Now you can move on to making a lid that will fit the box perfectly.

Creating the HINGED LID

The lid for the box starts out as a plywood panel that's supported by hardwood frame pieces glued to its bottom face. It attaches to the box via a lid mount, which at the outset, is part of the lid blank.

Once the lid is properly fashioned, you'll cut the lid mount free from the lid blank and glue it to the tab at the back of the box. The edges of the lid will ultimately be trimmed to match the box, but there's some work to be done before you get to that stage of the game.

LID BLANK FIRST. As you see in the main drawing, the four mitered frame pieces that make up the bones of the lid are not all the same size. The front and sides are narrower than the back. Cutting these pieces to size is the first order of business. Then I glued the frame pieces to the plywood panel.

After the glue dried on the lid blank, I shifted my attention to making the groove to receive the plywood tab formed by the back of the box. Figure 1 below walks you through the process. Next, there's a few more details that need to be addressed on the lid.

POCKET DETAILS. There's a pocket in the center of the lid that the handle nests in. At this point, you can glue in place the plywood pocket wall that you see in main drawing above and detail 'a.' This pocket wall and its partner, the pocket bottom, (shown in the main drawing on the next page) allow the handle to lie flat below the surface. You'll address the pocket bottom later. But for now, just run a bead of glue around the perimeter and install the pocket wall to the underside of the top, as shown in detail 'a' above. After the glue is dry on this part, it's time to bring the lid and box together.

THE MATING GAME. If you're making more than one box it's at this point of the construction that you must pair up the boxes and lids. And you'll want to mark them and keep them together from here on out. This is because each

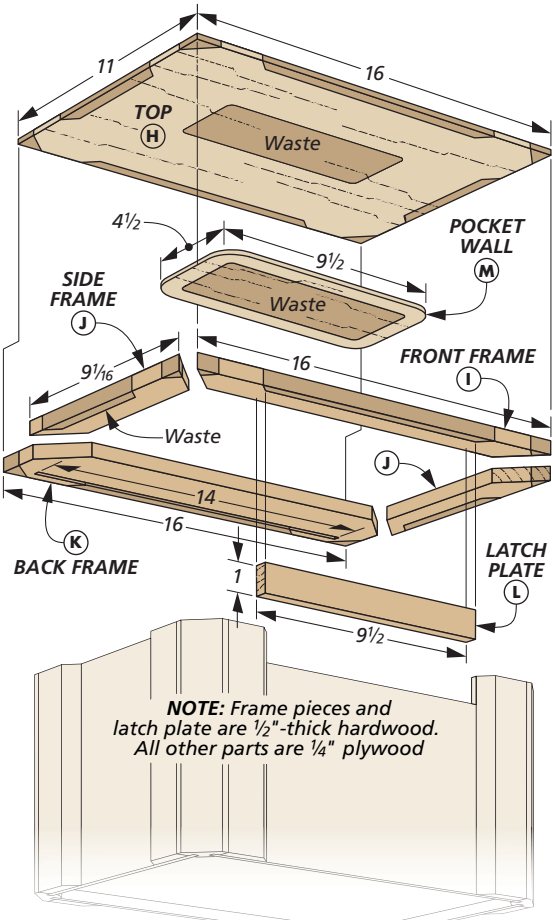

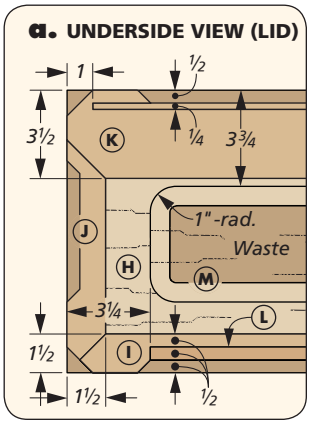

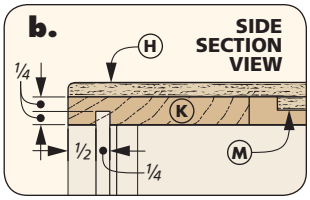

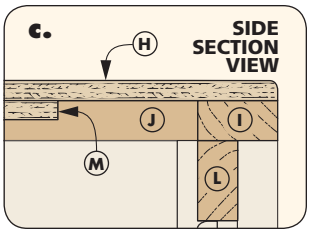

How-To: SHAPE & ASSEMBLE THE HINGED LID

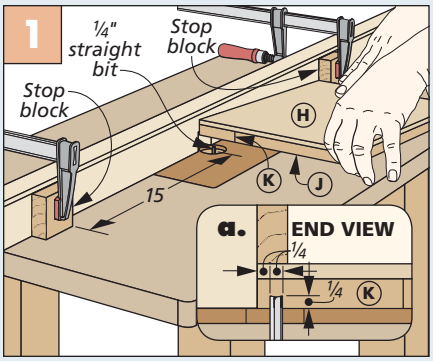

Rout Groove. Plunge cutting the groove in the lid blank is done at the router table using stop blocks.

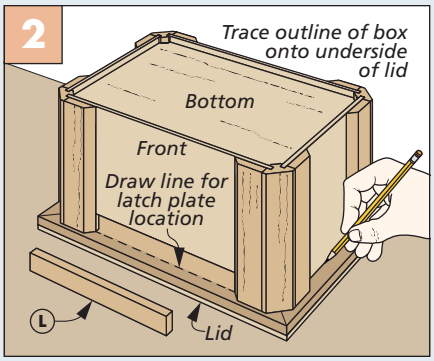

Trace Box Profile. Center the box on the lid, then transfer the box profile to the lid. Remove the waste at band saw.

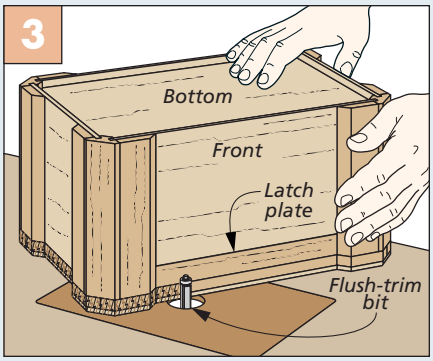

Rout Lid Profile. With the box and lid upside down, use the router table to trim the lid flush with the box.

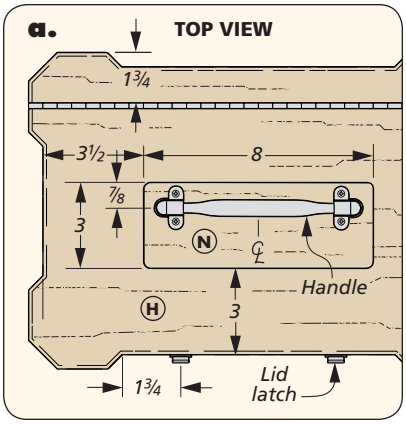

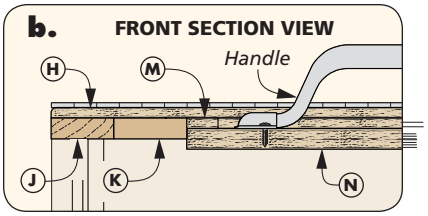

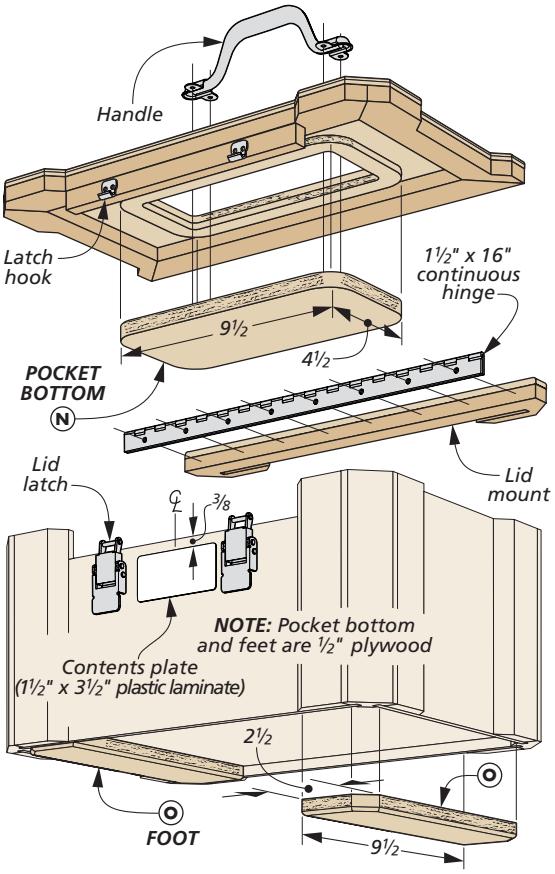

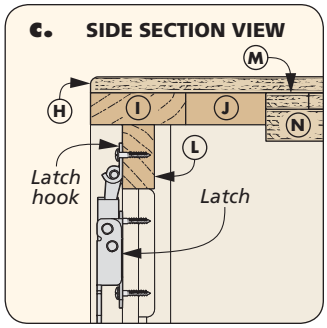

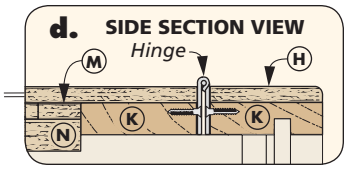

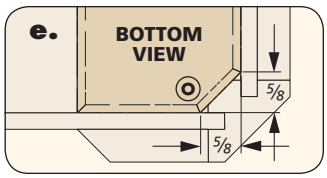

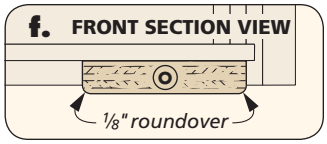

box is going to serve as the template for shaping its lid. So lay the lid face down on the bench and slide the tab on the back of the box into the groove at the back of the lid.

SHAPING THE LID. As you transfer the shape of the box to the lid blank, use some double-sided tape on the corners. This will prevent the lid blank from shifting around.

To make a perfectly matching lid and box requires the two steps that are covered in Figure 2. The first step is to locate where the latch plate sits on the lid. Simply mark the corners of the box opening on the lid and glue the latch plate in place.

The second thing that's covered in Figure 2 is tracing the shape of the box onto the lid. After you cut away some of the waste, rout the final shape (Figure 3.)

FINISHING THE LID. To create the opening in the lid for the handle, I made a simple template from MDF. Figure 4 and the information on page 66 will show you how this is accomplished. When you're done with that, glue the pocket bottom in place.

LID MOUNT. Cutting the lid mount section free of the lid is quick work at the table saw, as detailed in Figure 5. Then glue it to the back tab on the box.

When the glue was dry, I attached a continuous hinge to the lid mount. The hinge is a bit thicker than the saw kerf that cut the lid apart. So you'll need to trim the back edge of the lid to keep things aligned. When the front of the lid and box are flush again, attach the lid to the continuous hinge as well.

SOLID FOOTING. Just a few things are left to wrap up the box and lid. Each box is supported by two plywood feet. As details 'e' and 'f' show, the feet are glued into the recess on the bottom of the box and extend below the sides and corners of the box. After rounding over the edges, I glued them in place. I added a piece of plastic laminate between the latches to provide a place to write down what's inside.

Before installing the rest of the hardware, I removed the hinge and applied a couple of coats of lacquer to the box. To finish up the box, just add the handle and lid latches. Their locations are covered in the drawings above.

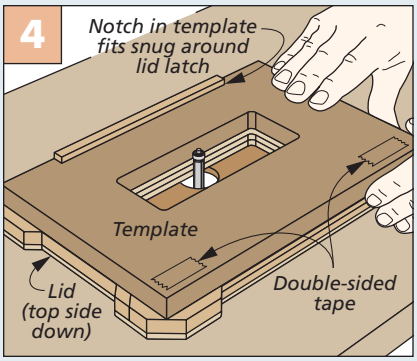

Create Pocket Wall. After removing the waste with a jig saw, a template and flush-trim bit true up the lid opening.

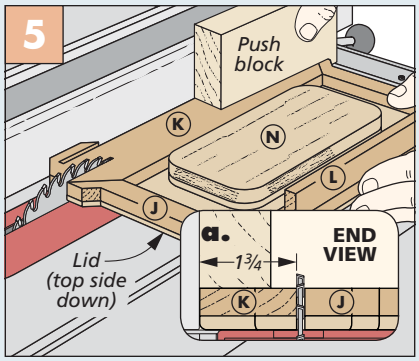

Make Lid Mount. Cutting the back portion of the lid free at the table saw creates the lid mount.

Building the STORAGE CASES

I made this plywood case to organize the boxes in my shop. Each box rests on a pull-out tray. Depending on the number and size of the boxes that you build, you can configure the case to suit your needs. In addition, the case can be attached to the wall or mounted on casters to make a cart.

CASE CORNERS & PANELS. Like the boxes, the case parts are joined with hardwood corners. The process for making them is similar — with one difference. Start by making the corners and cutting grooves in two of the edges, as before.

You can now form a tongue on the sides, top, and bottom to receive the corner pieces (Figure 1 below). Then cut grooves to accept the back, as in Figure 2.

Here's where things are different: I glued the corners to the top and bottom panels while the corners are still square. Then I beveled the corners.

The case sides still require some work. Cut narrow dadoes for a set of hardboard cleats (main drawing). These cleats register the drawer slides to simplify installation. Glue the cleats in place.

THE BACK. The back is made from ½" plywood to help strengthen the case for mounting it on casters, or attaching it to the wall. After creating a tongue along the edges, trim the corners of the back to fit into the case corners (detail 'c').

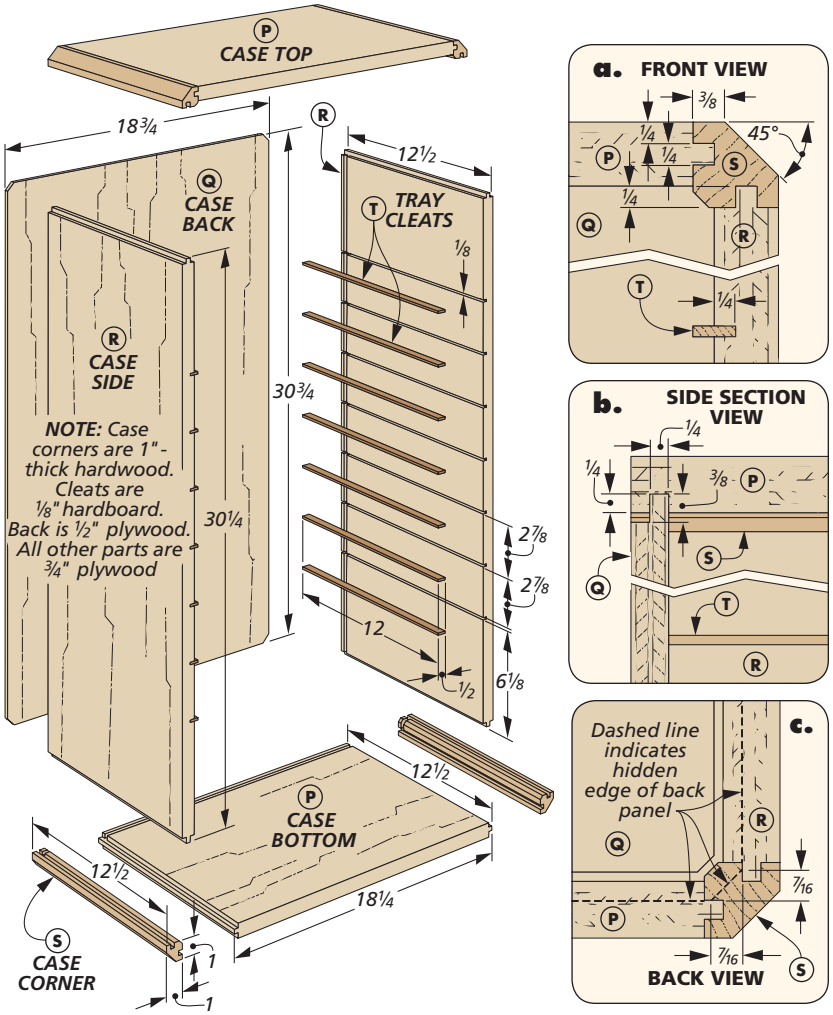

CASE ASSEMBLY. With the corners already glued to the top and bottom, assembly is a little easier. The bevel on the corner prevents you from applying clamps right on the corner. However, since the case is made from stiffer ¾" plywood, you can offset the clamps from the corners slightly and still close up the joints.

THE TRAY

As I said before, the boxes fit onto trays in the case. Each tray is a plywood panel

How-To: CUT THE CASE JOINERY

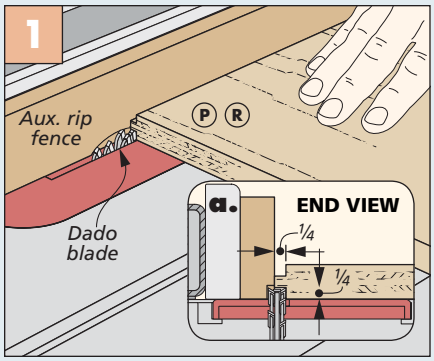

Rabbet. Bury a dado blade in an auxiliary fence to form the tongues in the case sides, top, and bottom.

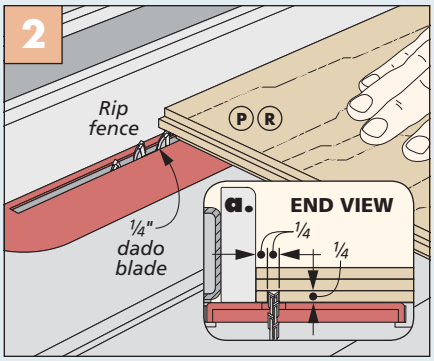

Grooves. Using a dado blade, cut the groove along the back edge of the case parts to house the plywood back.

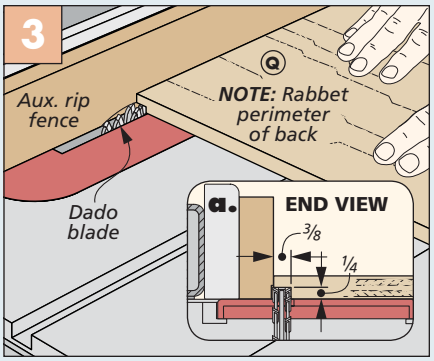

Rabbet Back Panel. Use a dado blade buried in an auxiliary fence to form a tongue to fit the grooves.

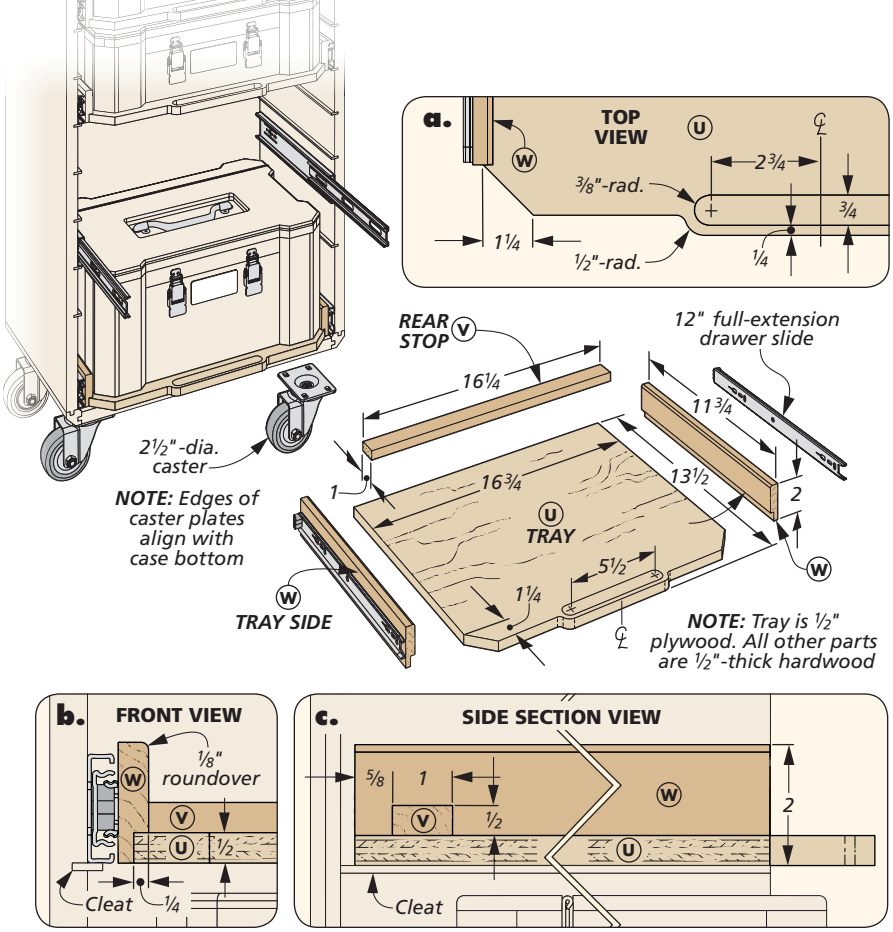

How-To: BUILD TRAYS

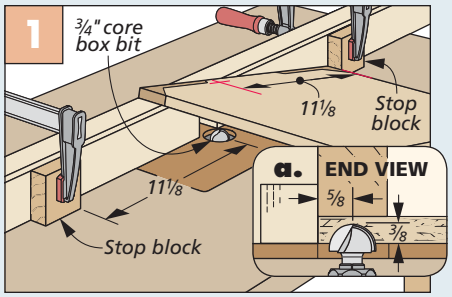

Finger Pull. The finger pull in the tray is made using a core box bit and a plunge cut at the router table.

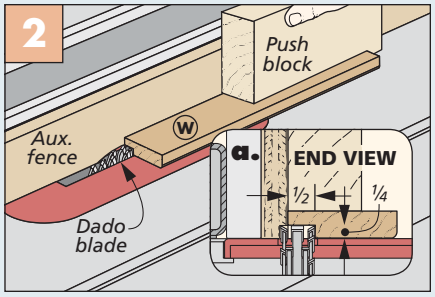

Side Rabbets. A dado blade buried in an auxiliary rip fence creates the rabbet in the hardwood sides.

with hardwood sides that have full extension drawer slides attached. As the drawing above shows, there's a stop at the back of the tray to hold the box in place (detail 'c'). The slides rest on the cleats and are screwed to the case (detail 'b').

SHAPING THE TRAY. Once you've cut the tray to its overall size, take some time to lay out the front profile. Then, using some stop blocks on the router table, rout the finger pull as Figure 1 shows. Cutting the rabbet in the sides is a simple operation that Figure 2 covers.

FINAL DETAILS. After the trays are glued up, it's a good time to apply finish. Then you have a decision to make: whether you're going to mount the case to the wall, or add some casters for a mobile storage solution. No matter which choice you go with, the result is the same. A more organized shop that's more enjoyable to spend time in. W

Materials, Supplies & Cutting Diagram (Material for one medium box & one storage case & tray)

A	Box Sides (2)	1/4 ply. - 7 1/8 x 9
B	Box Back (1)	1/4 ply. - 7 3/8 x 14
C	Box Front (1)	1/4 ply. - 7 1/8 x 14
D	Box Bottom (1)	1/4 ply. - 9 3/4 x 14 3/4
E	Latch Backer (1)	1/4 ply. - 2 1/2 x 9 1/2
F	Box Corners (4)	1 1/4 x 1 1/4 - 7 1/8
G	Corner Plates (8)	1/2 x 2 - 7 1/8
H	Top (1)	1/4 ply. - 11 x 16
I	Front Frame (1)	1/2 x 1 1/2 - 16
J	Side Frames (2)	1/2 x 1 1/2 - 9 1/16
K	Back Frame (1)	1/2 x 3 1/2 - 16
L	Latch Plate (1)	1/2 x 1 - 9 1/2
M	Pocket Wall (1)	1/4 ply. - 4 1/2 x 9 1/2
N	Pocket Bottom (1)	1/2 ply. - 4 1/2 x 9 1/2
O	Feet (2)	1/2 ply. - 2 1/2 x 9 1/2
P	Case Top/Bottom (2)	3/4 ply. - 12 1/2 x 18 1/4
Q	Case Back (1)	1/2 ply. - 18 3/4 x 30 3/4
R	Case Sides (2)	3/4 ply. - 12 1/2 x 30 1/4
S	Case Corners (4)	1 x 1 x 12 1/2
T	Tray Cleats (14)	1/8 hdbd. - 1/2 x 12
U	Tray (1)	1/2 ply. - 13 1/2 x 16 3/4
V	Rear Stop (1)	1/2 x 1 - 16 1/4
W	Tray Sides (2)	1/2 x 2 - 11 3/4

- (1) 1 1/2" x 16" Cont. Hinge w/Screws
- (1) Folding Pull Handle
- (2) 1 3/16" x 2 3/4" Latches
- (2) 12" Full-Extension Drawer Slides
- (4) 2 1/2"-dia. Casters (optional)

1 3/4" x 3" - 48" Hard Maple (2.0 Bd. Ft.)

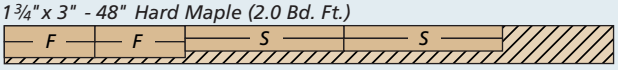

***ALSO NEEDED:** One 30" x 60" Sheet of 3/4" Baltic Birch Plywood, One 30" x 60" Sheet of 1/2" Baltic Birch Plywood, One 30" x 60" Sheet of 1/4" Baltic Birch Plywood, Plastic Laminate*

1/2" x 5" - 84" Hard Maple (2.9 Sq. Ft.)

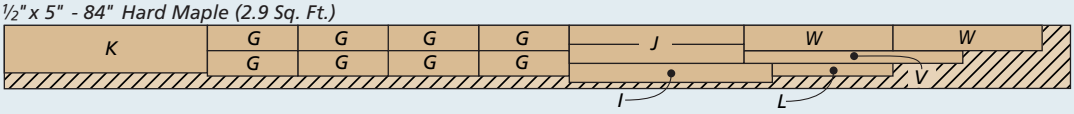

Heirloom Project

glass tower Display Cabinet

It's tough to know what you'll look at first, the objects stored inside this impressive cabinet or the fine woodworking it takes to build it.

Mementos, knick-knacks, collectibles — no matter what you call them, your treasures deserve a home that matches their value to you. This display cabinet puts them on center stage while protecting them from dust and damage.

The upper portion of the cabinet is a showcase with a glass door and sides. A mirrored back and glass shelves allow plenty of light inside and permit all-around views of the objects on display. The lower compartment offers out-of-sight storage, which is always a welcome addition to any home.

DESIGN DETAILS. Building a fine cabinet like this also gives you the opportunity to put your woodworking skills on display, as well. The cabinet takes a unique approach to frame and panel construction. You'll make raised panels for the lower part of the case, while the doors feature cross-banded veneer work.

The cabinet is made mostly from solid wood. When it came to choosing the materials, I went with the rich, warm look of walnut and ribbon-stripe mahogany veneer in keeping with the function of the cabinet.

Construction Overview / OVERALL DIMENSIONS: 26½"W x 82¼"H x 17¾"D

Strong and sturdy mortise and tenon joinery used on doors and side assemblies

Built-up profiles create a custom crown molding

Plywood tops and bottoms joined with tongue and dado construction

Beveled mirror reflects light into cabinet

Upper compartment features beveled glass panels

Bead molding holds panels and adds detail to the frames

Cross-banded veneer enhances door fronts

No-mortise hinges speed up door installation

Objects inside rest on glass shelves

Square stop secures panels from the inside

Wide beaded trim wraps around doors

Wide molding created with a "table edge" router bit

Backer supports leveling hardware

Levelers ensure cabinet has a stable footing

Splines reinforce mitered base

NOTE: For hardware sources and finishing information, turn to page 67

◄ Raised panels in the door and sides enclose a handy storage compartment in the lower part of the display cabinet.

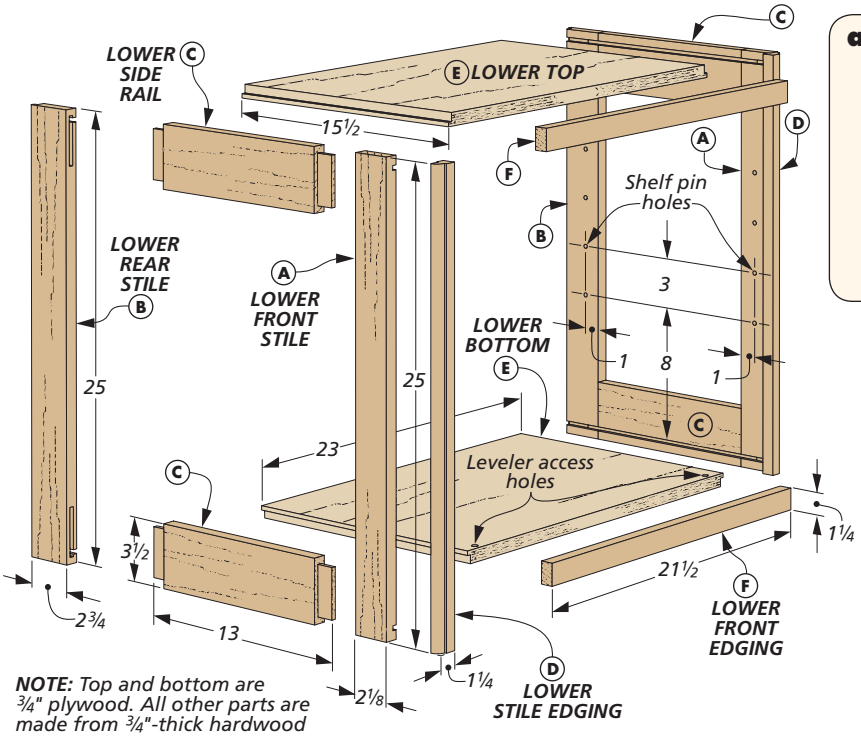

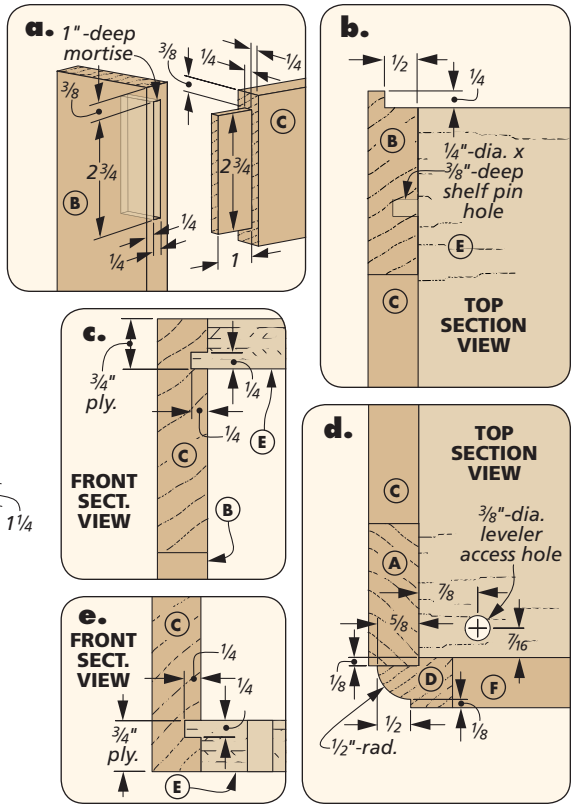

Mortise & tenon **FRAMES**

The display cabinet consists of two cases joined top to bottom. In spite of the different panel treatments (wood vs. glass), the cases are built using the same technique. Simple mortise and tenon frames make up the sides of each case.

The frames are joined with a plywood top and bottom and trimmed with some strips of hardwood to create a face frame. Since so much of the work that goes into each case is identical, it pays to work on both cases at the same time.

SIDE FRAMES. The frames that make up the sides are the first order of business. The drawings above and on the next page provide the details for sizing the parts. After cutting the stiles and rails to size, it's time for some joinery.

I cut the mortises using a hollow chisel mortiser, as shown in Figure 1 below. It creates a square, consistent mortise every time. Detail 'a' above has the dimensions for the mortise sizes for the stiles in both the upper and lower cases.

The table saw fitted with a dado blade provides a simple, surefire way to cut the mating tenons on the rails, as in Figure 2. Cut the long cheeks first, then flip the workpiece on edge to cut the end shoulders. Note that you'll need to

How-To: CUT MORTISES, TENONS & DADOES

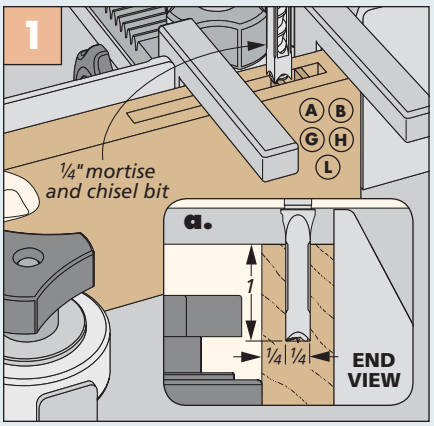

Mortises. Leave a little waste between each cut as you work along the mortise. Remove the waste in a second pass.

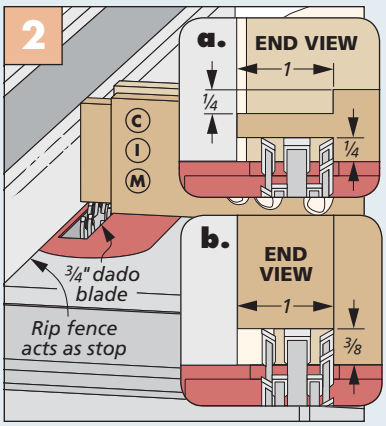

Tenoning. Use test cuts to dial in the blade height to create a snug-fitting tenon.

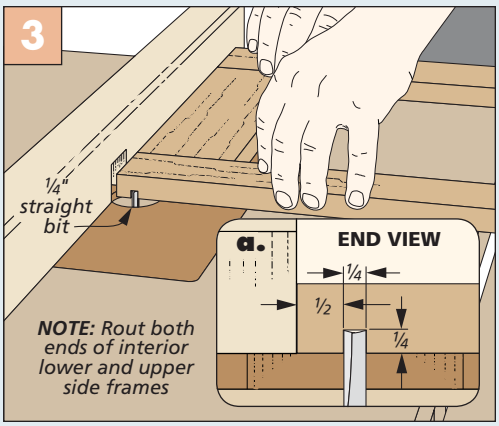

Routing Dadoes. A straight router bit creates a smooth, flat-bottomed dado. You can make the cut in a single pass.

adjust the blade height for these cuts, as Figure 2b indicates. The side frames are ready for assembly at this point.

MORE JOINERY. The frames require some other work. Dadoes at each end of the frame hold the plywood top and bottom panels, as in details 'c' and 'e' on the previous page and detail 'b' at right.

The location of the dadoes is key. The panels need to be flush with the ends of the frames. I cut the dadoes at the router table (Figure 3 on the previous page).

In addition, the frames have a rabbet cut along the back edge to accept the backs. Here again, a straight bit in the router table works well, as illustrated in Figure 1 in the box below.

The rabbet on the lower cabinet is sized to accept a ¼" plywood back, as you can see in detail 'b' on page 46. The upper case requires a larger rabbet to hold a frame similar to the side assemblies, as in detail 'a' at right. Drilling shelf pin holes completes the work on the frames of each case.

FACE FRAME. In order to define the opening for the doors, I made a face frame that consists of strips of edging. Start by rabbeting the strips and gluing them to the front stiles. Then rout a roundover on the corner (Figure 2).

TOPS & BOTTOMS. You're ready to cut the plywood top and bottom panels now. Forming a tongue on each end fits the dadoes in the frames. Drill leveler access holes in the lower case bottom and glue the cases together. At the front of the cases, it's time to add the strips of front edging to conceal the plywood edges and round out the face frame.

ONE MORE FRAME. All that's left on the upper cabinet (for now) is to make the back frame. It's built just like the side frames and sized to fit in the rabbets in the case sides, flush with the ends.

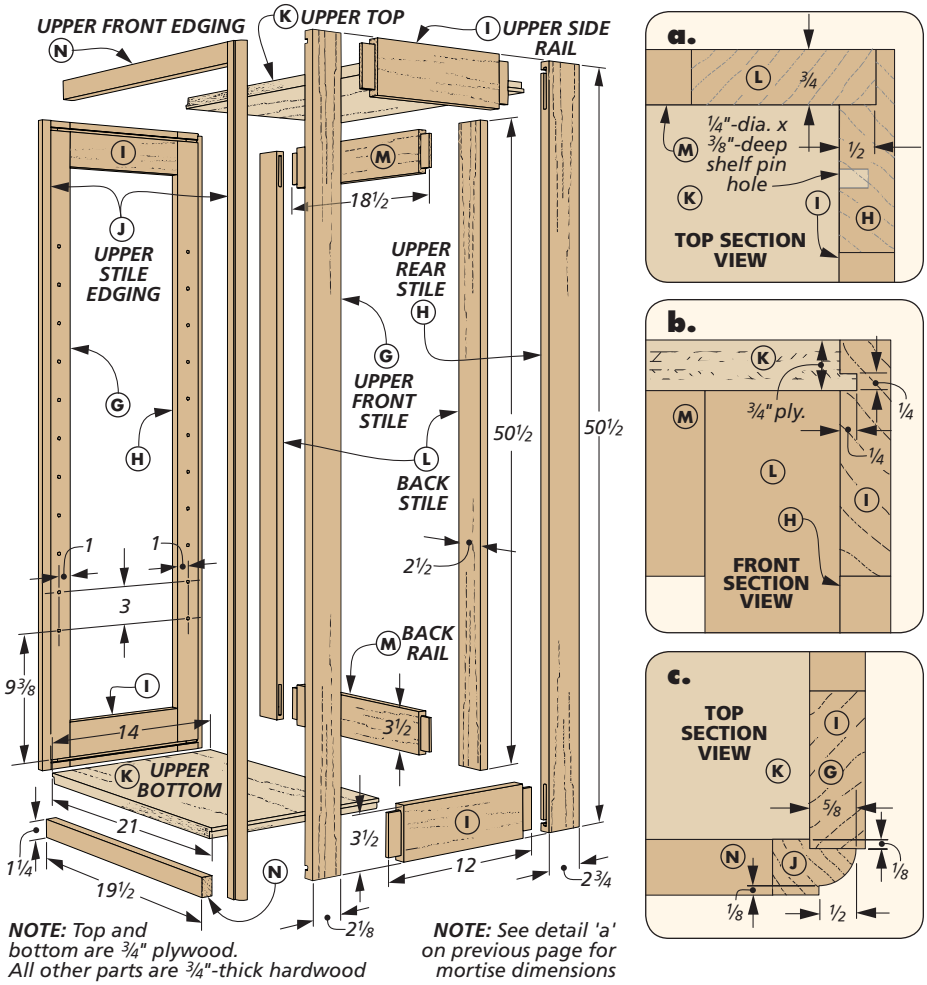

How-To: ROUT RABBETS, CREATE BEAD & FORM TONGUES

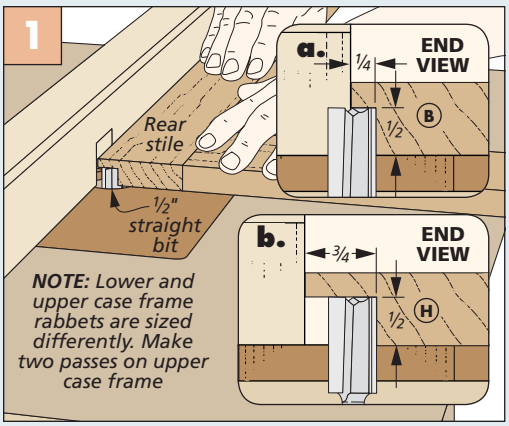

Rabbets. Set the bit as in detail 'a' and rabbet the back of all the frames. Reposition the fence to cut the deeper, upper rabbets (detail 'b').

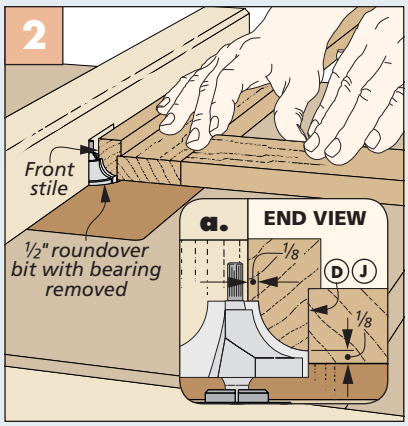

Bead Detail. Remove the bearing from a roundover bit in order to form a shoulder on both edges.

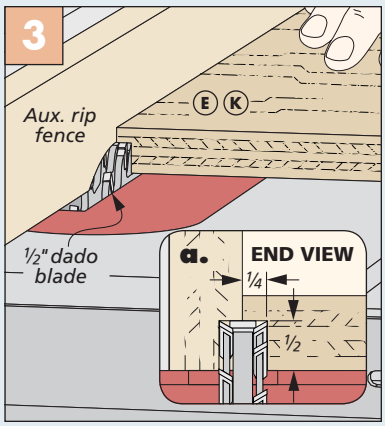

Cut a Tongue. A dado blade makes quick work of cutting a rabbet to form the tongue.

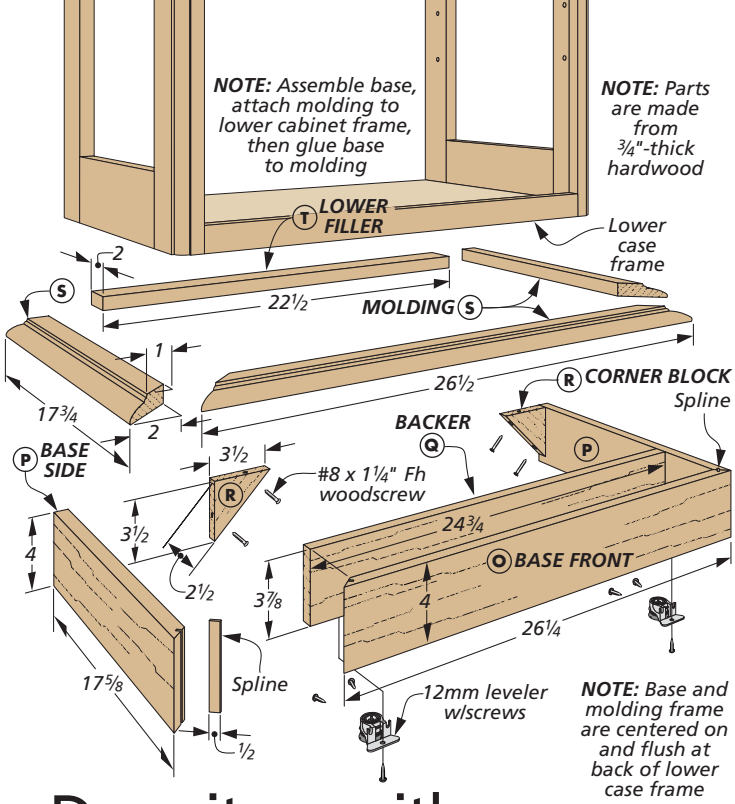

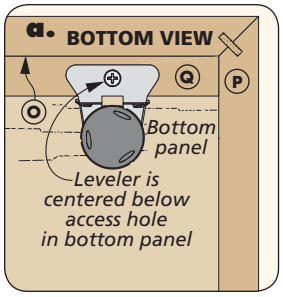

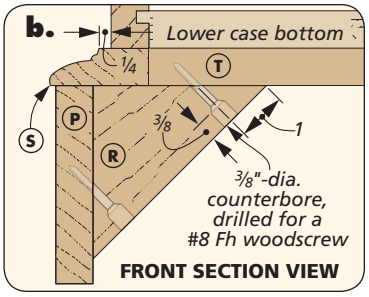

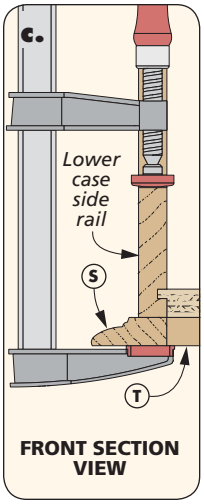

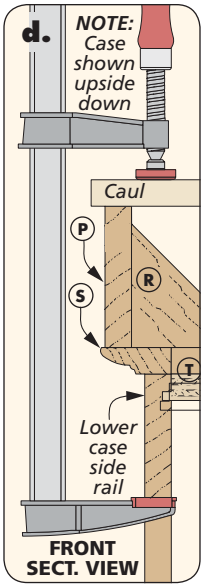

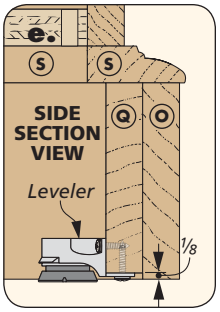

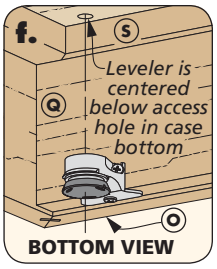

Dress it up with
A BASE & MOLDING

With the bones of the two cases complete, the attention turns to some of the details required to make this a piece of fine furniture. Starting at the bottom and working your way up, you'll make the base and create molding to punctuate the transitions between each component of the cabinet assembly.

Making the necessary parts is pretty straightforward woodworking. However, gluing overhanging molding pieces in place accurately does pose some challenges. So I've included some assembly pointers along the way.

MITERED BASE. With a tall cabinet, it's important to have a stable base. To do this, the base is a little wider and deeper than the lower case. The base begins with making a three-sided mitered frame, as shown in the drawing above. Figures 1 and 2 below highlight the steps for cutting and joining the parts with cross-grain splines.

A hardwood backer glued just behind the base front provides a mounting point for a pair of levelers, this is shown in details 'a,' 'e,' and 'f.'

WIDE MOLDING. A strip of molding forms the transition between the base and lower cabinet. In order to create

How-To: BUILD THE BASE

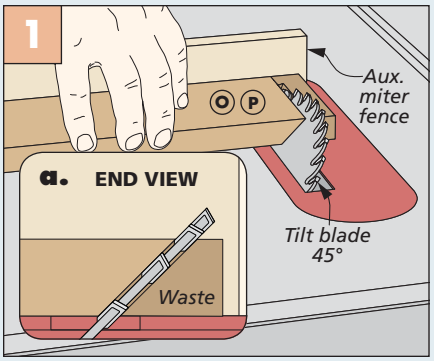

Cut Miters. Angle the table saw blade and guide the workpiece with the miter gauge to cut the part to length.

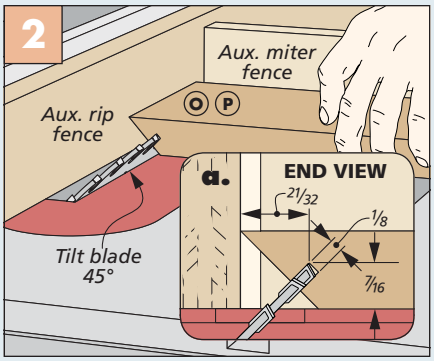

Spline Slot. With the blade still angled, cut a slot in order to reinforce the miter joint with a spline.

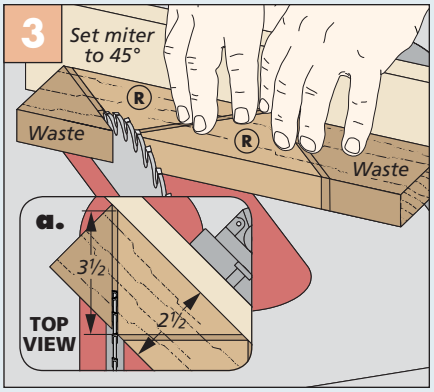

Corner Blocks. To maximize strength, cut the corner blocks so that the grain runs corner to corner.

a substantial molding profile, I used a table edge bit. This profile is also used for the waist molding and at the top of the cabinet, as well. So once you have the router table set up (Figure 1 below), it's a good idea to rout all the molding blanks you need in one go. Keep in mind the molding for the waist and top of the cabinet is wider than the base molding.

MAKING CONNECTIONS. Miter the molding to wrap around the sides and front. A filler strip at the back completes the framework. Detail 'c' on the previous page shows how the molding is glued to the bottom of the lower case.

After letting the glue set, you can attach the base (detail 'd'). A caul spanning the base distributes clamping pressure evenly. Since the back of the cabinet is against a wall, I cut wedge-shaped corner blocks to reinforce the back instead of a solid piece, as in Figure 3. The corner blocks are attached with glue and screws.

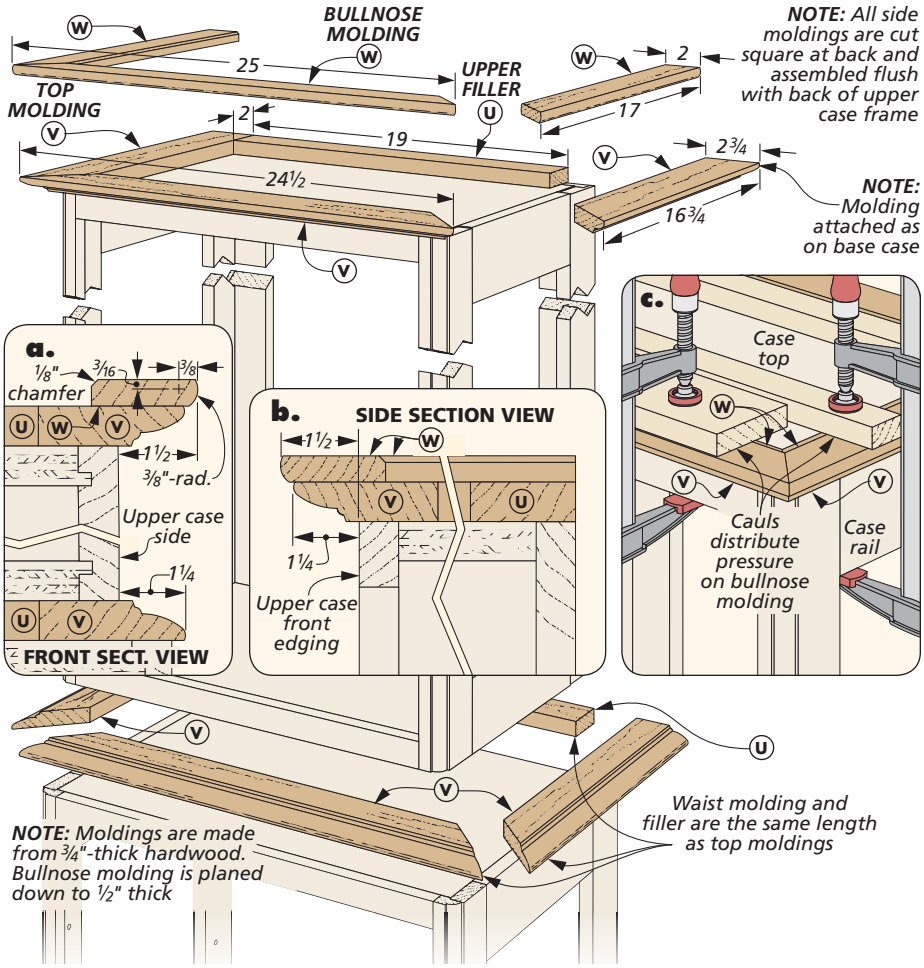

WAIST & CROWN MOLDINGS

Attaching molding to the upper case follows nearly the same process as the base. So grab the wider molding you made earlier and get started. I began by mitering and attaching the waist molding to the bottom of the upper case, as shown in the drawing at right.

TWO-LAYER CROWN MOLDING. Details 'a' and 'b' show the projection you're after as you miter and glue the crown molding in place. Don't forget the filler at the back. Take a look at detail 'c' to see the arrangement of clamps and cauls for gluing these pieces securely.

BULLNOSE MOLDING. To give the top of the cabinet extra prominence, I added a bullnose molding. It's shaped with an ordinary roundover bit, as you can see in Figure 2 in the box below. A chamfer softens the inside edge of the molding.

Then you can attach the upper case to the lower case. It's centered side to side and flush at the back. After applying glue and adding a few clamps to hold everything in place, I drove long screws up through the top of the lower case and into the bottom of the upper case, as shown in Figure 3 below.

How-To: MAKE & ATTACH MOLDING

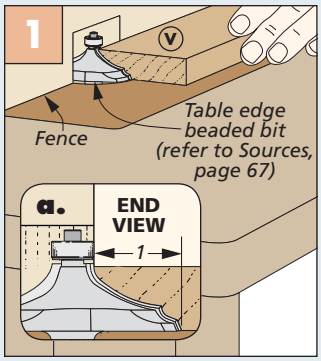

Molding. Rout the wide molding in several, progressively deeper passes.

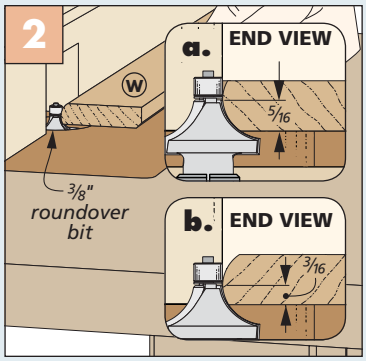

Bullnose Molding. Two passes are required to shape the curve of the bullnose molding profile.

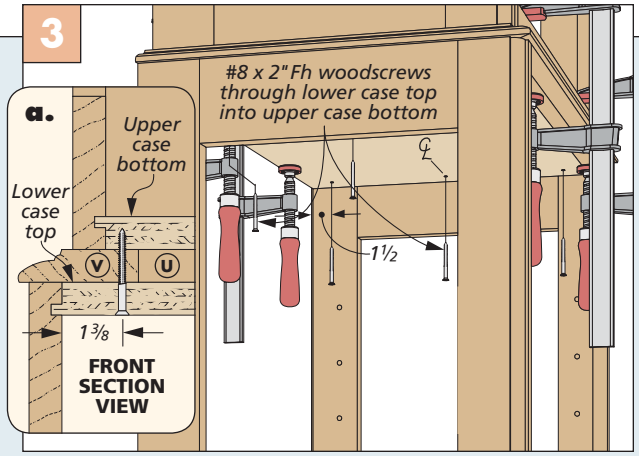

Glue the Cases Together. Spread glue and clamp the cases together. To reinforce the connection, drive long screws up from the lower case into the upper case.

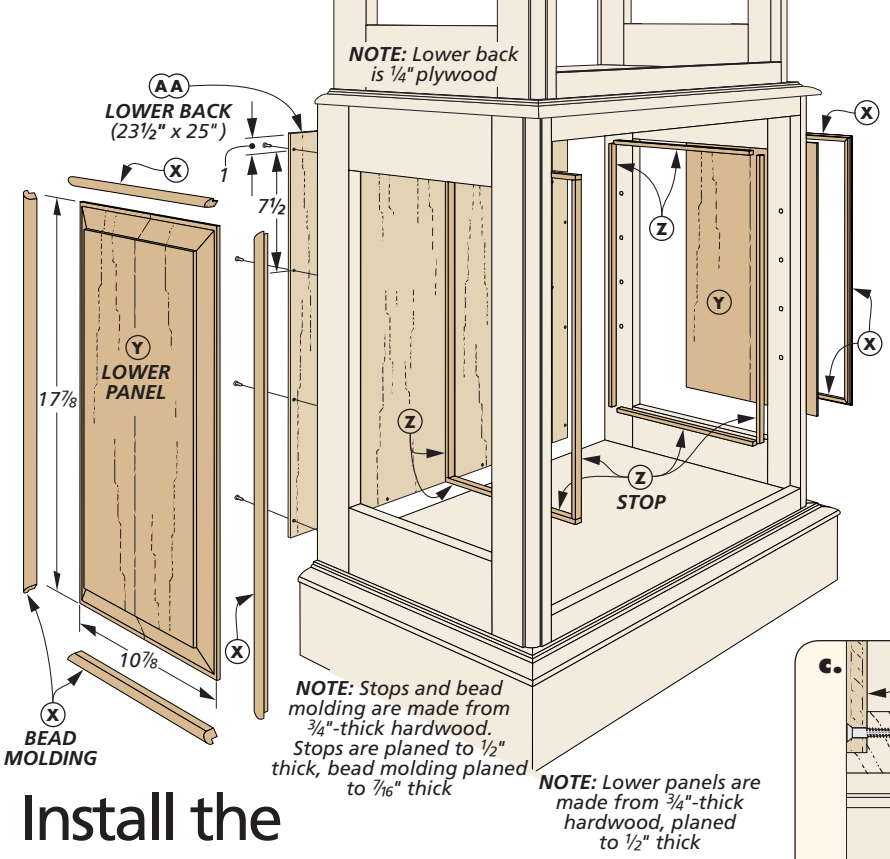

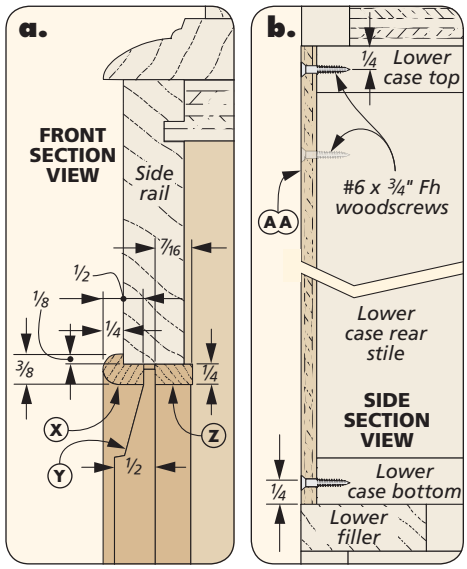

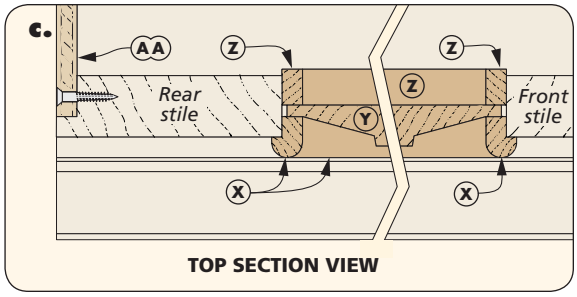

Install the WOOD & GLASS PANELS

For the next stage of the construction, you'll fill the openings in the sides and back of the cabinet. The lower part of the cabinet offers enclosed storage while the upper section is designed for display.

SECURING PANELS. As before, I began at the bottom of the cabinet and worked my way up. The lower sides of the cabinet house raised, solid-wood panels. Typically, these are captured in grooves. But as you know by now, the side frames don't have grooves.

Instead, the panels are sandwiched by two layers of trim, as shown in the drawings on this page and the next. A bead molding on the outside of the frame adds detail. On the back side, a square stop is more utilitarian in appearance.

MAKING RAISED PANELS. It isn't easy to find wide boards that are flat enough to create the raised panels. So I glued up narrower pieces. If you go this route, spend some time looking for boards that have similar color and grain patterns. This way, the panel will have a unified look and not be distracting. The panels are sized to allow room for

How-To: CREATE RAISED PANELS

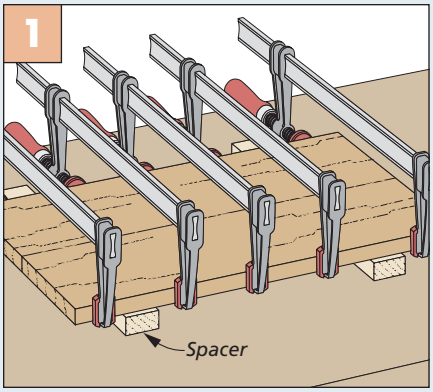

Glue up the Panel. Take care to get a tight joint line and clamp the boards flat for a warp-free panel.

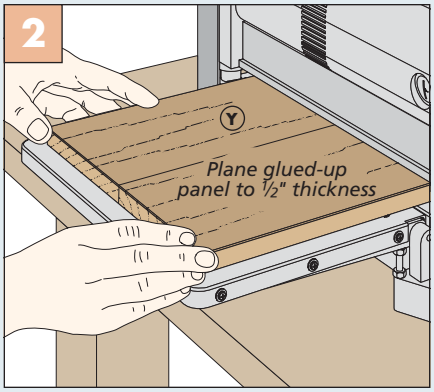

Plane & Trim. Once the clamps come off, plane the panel to final thickness and trim it to fit inside frame.

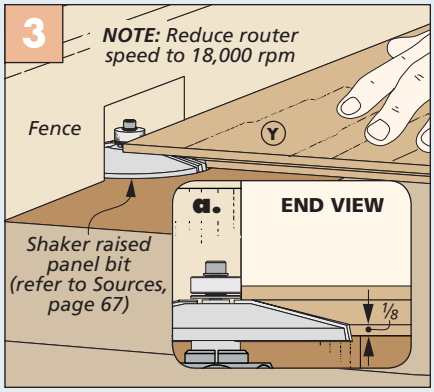

Shape the Profile. Rout the raised profile in several passes, raising the bit slightly between each pass.

seasonal wood movement along the side. The box at the bottom of the previous page highlights the major steps in making the panels. I like to apply finish to the panels before installing them, so I know they have full coverage.

BEAD MOLDING & STOP. With the panels in hand, you can make the molding strips that hold them in place. The bead molding for the front is unique. The bead is rabbeted to wrap around to the front side of the frame, as shown in details 'a' and 'c' on the previous page.

Considering the small size of the molding, it may seem like a challenge to make. But as the drawing at the bottom of the page shows, there's a way to do it safely and accurately. The molding is mitered to wrap around the inside of the frame and glued in place.

The stop, on the other hand, is straightforward to make. It's simply cut to size at the table saw. These strips meet at simple butt joints in the corners. I glued the stop in to hold the solid-wood panels.

For the back of the lower compartment, cut a piece of plywood to size. It's secured with glue and screws.

GLASS PANELS & MIRROR

When it comes to installing the glass panels for the upper part of the cabinet, not much changes. I had a local glass shop make the beveled panels, mirror, and shelves. It's a good idea to have the cabinet parts complete before ordering the glass. This way, you can have the glass shop size the panels based on the openings in the actual project (about 1/8" smaller than openings).

The panels are held with the same molding pieces. The bead is glued in first, then the glass can be added. The stop on the inside is secured with brads. If a glass panel should break, you can remove the stop to replace it. Hold off on installing the glass until after you apply finish to the completed cabinet.

MIRRORED BACK. The back frame holds a beveled mirror panel, as in detail 'b.' Bead molding is installed on the inside edge of the frame. To support and protect the back of the mirror, I installed a plywood panel. The mirror and plywood are held by retainers. They swing out of the way to remove the back.

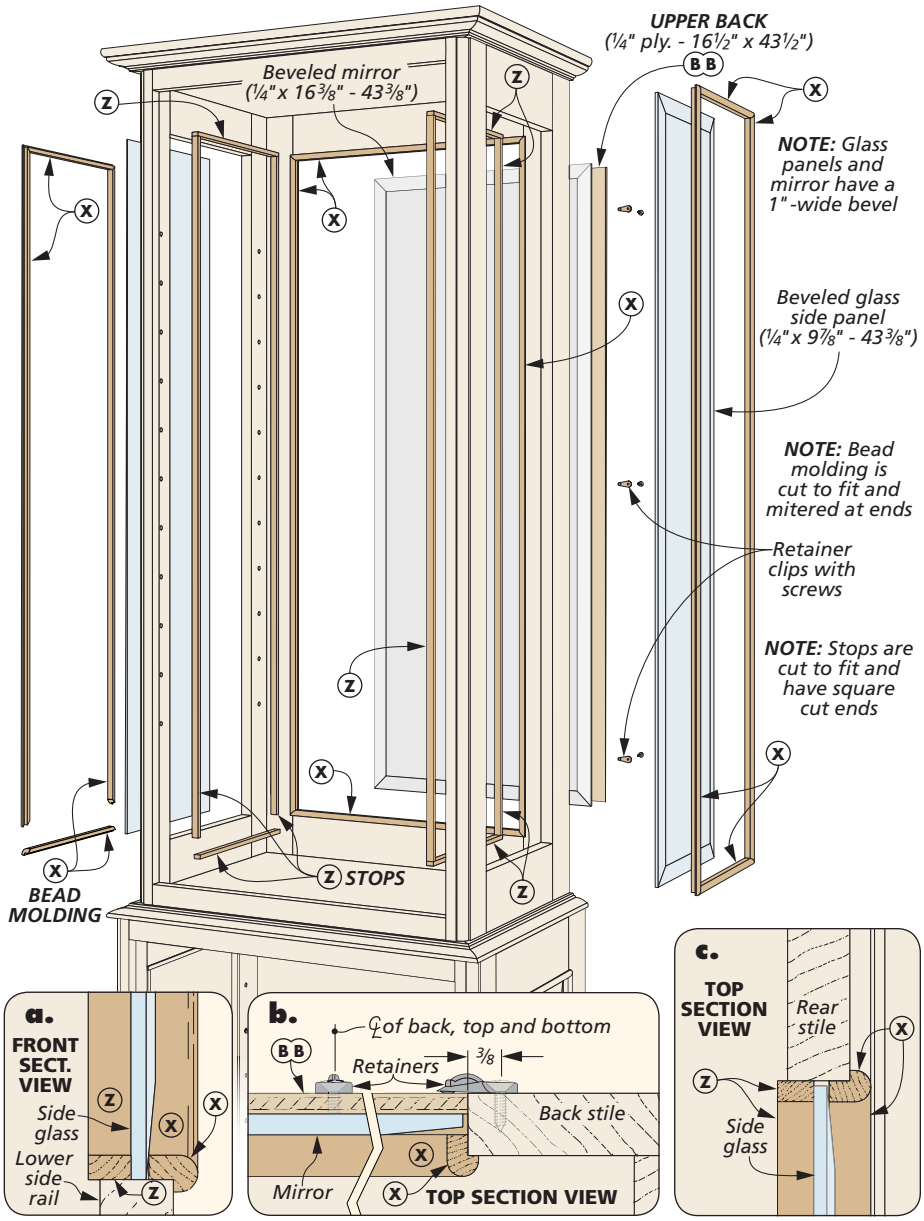

How-To: CREATE BEAD MOLDING

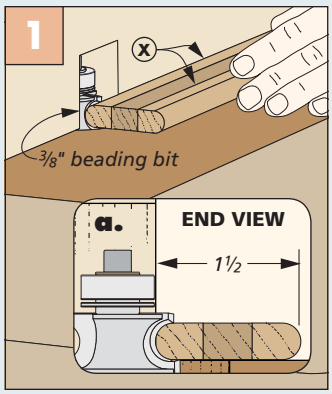

Rout Bead. Rout a bead on each side of a wide blank for safe handling and control.

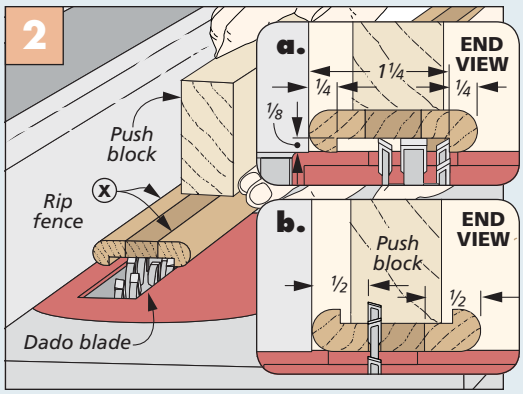

Cut a Groove. A dado blade creates the wrap-around rabbet. Install a combination blade to rip the strips to final width.

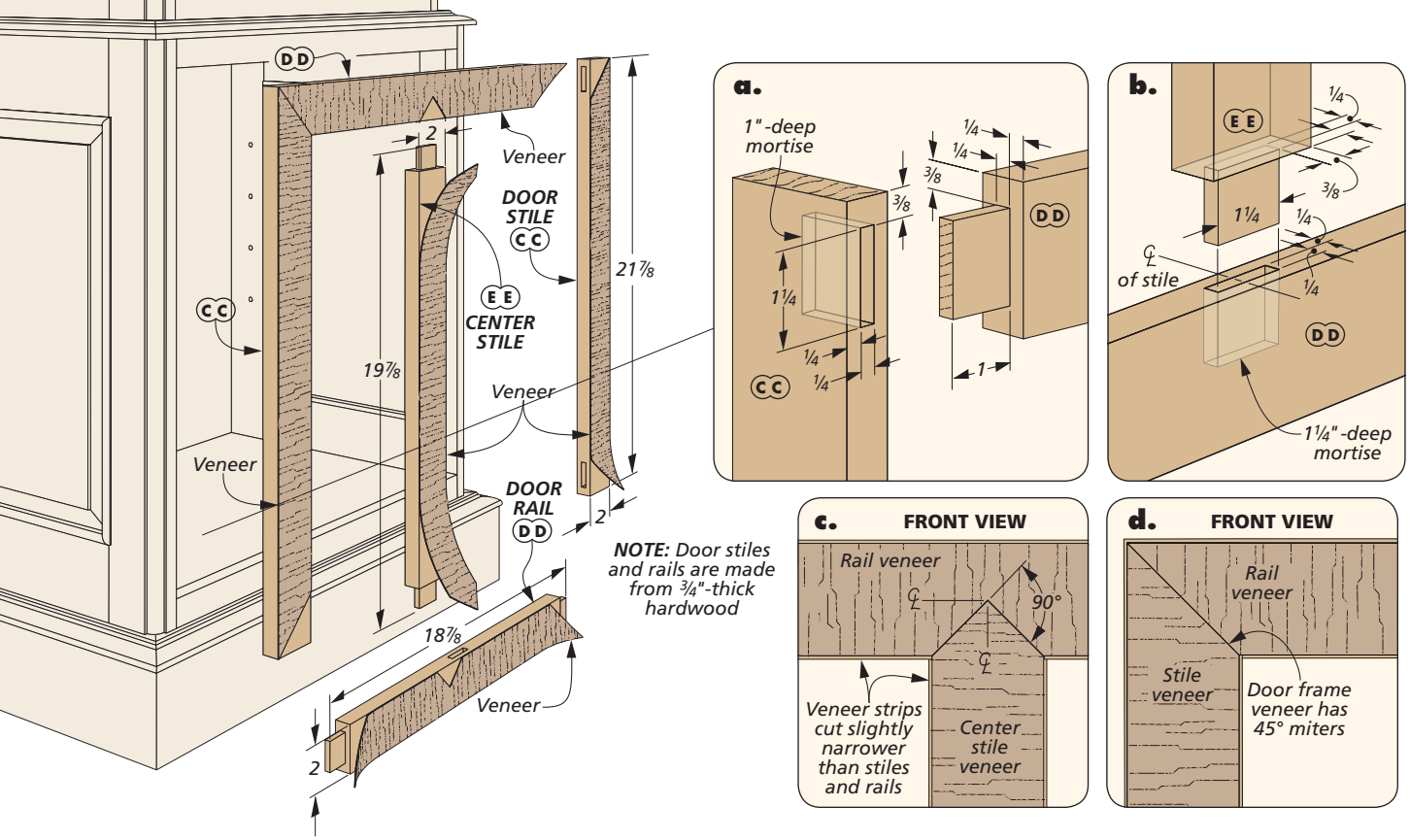

Build a VENEERED DOOR

The mortise and tenon skills you've practiced on the case come in handy for the next stage — building the doors. That's because at the heart of each door is a frame very similar to those you've made already. But these doors add a few more challenges to the mix.

VENEER. In order to make the doors stand out from the rest of the cabinet, the front surfaces are covered in cross-banded veneer. This means the grain on the veneer runs across the width of the pieces and not along the the length. I used ribbon-stripe mahogany veneer.

BEADED TRIM. One other detail that I want to point out is that the outside of the door is wrapped with a beaded trim shown on the next page. This echoes the bead molding used to secure the panels in the side frames and door.

When sizing the door parts, you need to allow for the outer trim that you'll apply later as well as creating an even gap around the door, as shown in details

How-To: CUTTING & APPLYING VENEER

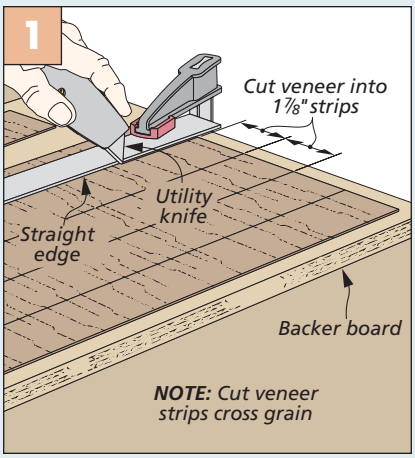

Cutting Strips. Use a straightedge to guide a utility knife to make straight, clean cuts in the veneer.

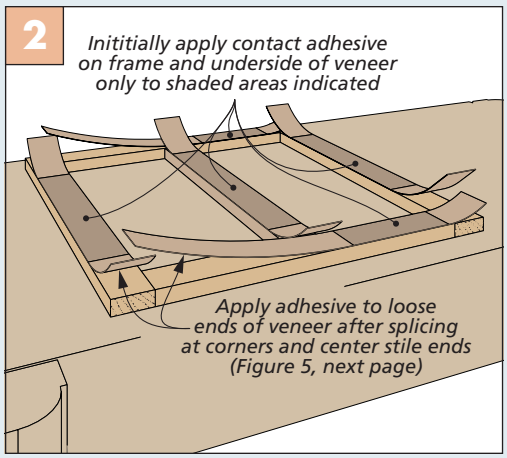

Attach the Strips. Apply contact adhesive to key areas to hold the strips in place in order to cut accurate joints where the veneer meets.

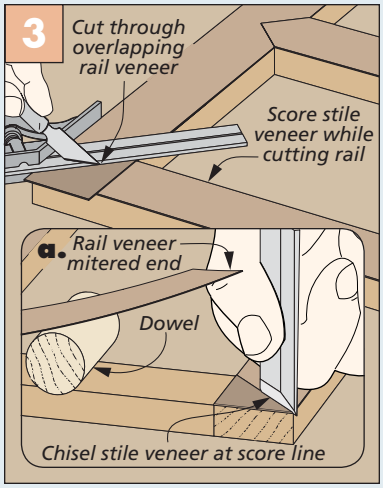

Miters. Use a combination square as a guide to cut the overlapping veneer in two steps.

'a' and 'b' in the drawing at right. There's also a center stile to divide the door. After you cut the joinery (details 'a' and 'b' on the previous page) and glue up the door, it's time to get started on the veneer.

MITERED VENEER. The veneer I used has a paper backing that makes it easier to work with and is less likely to break. Start by cutting strips that are slightly narrower than the width of the stiles and rails. (The edges will be covered by the bead molding later.) Use a sharp utility knife and a straightedge to make the cuts, as in Figure 1 on the previous page.

The veneer strips meet at miters in the corners of the door frame. At the center, a "bird's mouth" forms the transition between the center stile veneer and rail veneer. Achieving a tight fit at the veneer joints stands as your main objective.

The problem is the strips of veneer can easily shift around as you're cutting the miters. The solution is to tack them in place. A good way to do this is to use contact adhesive. It works quickly, and you don't need to clamp the pieces or wait a long time for glue to dry.

It's a good idea to apply two coats of adhesive to both the door frame and veneer strips. For now, you only need to apply adhesive to the areas shown in Figure 2. This leaves the corners loose, so you can cut the miter and bird's mouth joints. When the adhesive is dry to the touch, carefully press the strips firmly in place. The bond is instant.

The veneer strips overlap at the corners (Figure 3). As you cut one layer, it scores the other. This provides a solid reference for chiseling away the waste for a tight fit.

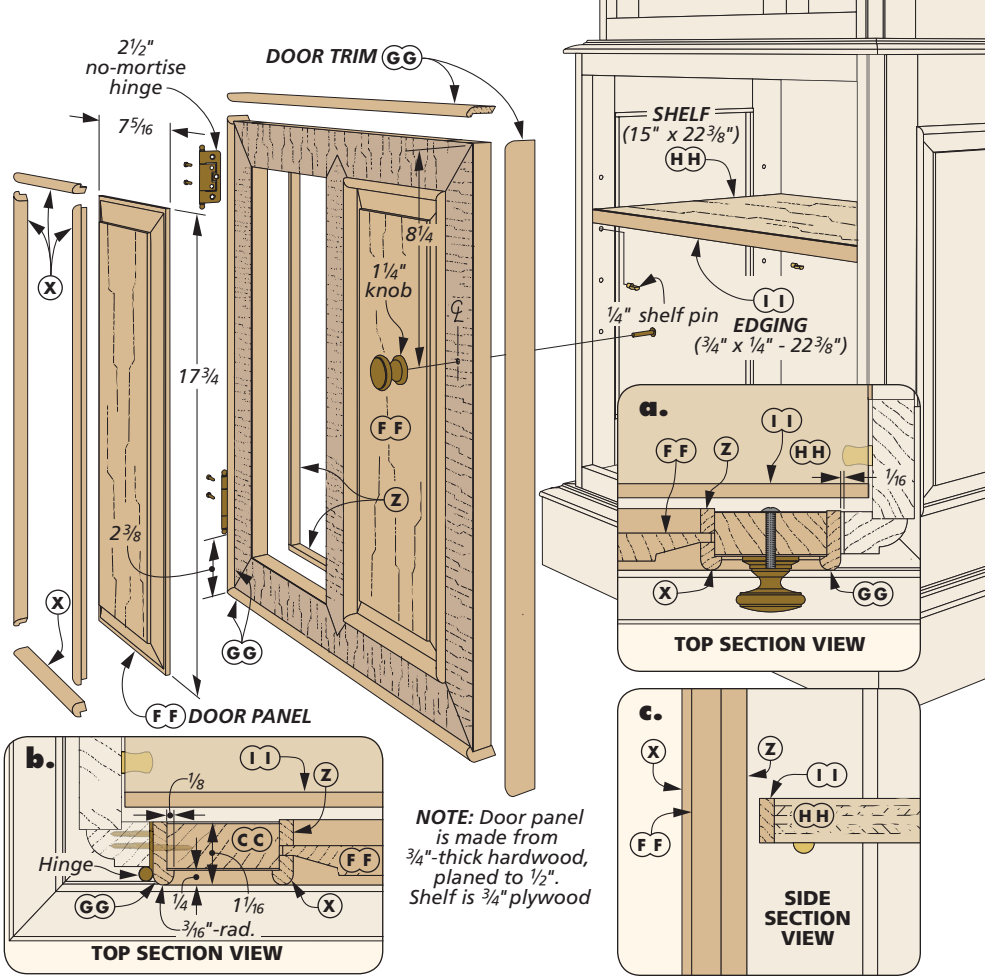

Cutting the bird's mouth involves a similar approach, as shown in Figure 4. The only difference is that the center stile veneer comes to a sharp peak and fits into a matching V-notch.

GLUE IT DOWN. To tie up the loose ends (so to speak), apply two coats of adhesive to the bare portions of the door frame and veneer, as in Figure 5. Take care while brushing adhesive on the veneer so you don't break it.

PANELS, TRIM & SHELF

With the veneer work complete, you can settle back into some familiar territory. Make the two raised panels for the door, and install them with bead molding and stop, as in the drawing above.

To wrap up the door, create the outer trim. This is just a wider version of the bead molding. It wraps around the full thickness of the door and overlaps the veneer slightly on the front. The door is mounted with no-mortise hinges.

Inside the lower compartment, I cut a plywood shelf to size and applied hardwood edging to the front. It rests on adjustable shelf pins.

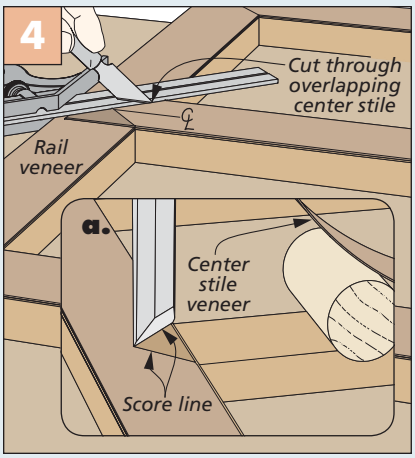

Bird's Mouth. Align the square with the center of the stile to cut the veneer and form the peak and notch.

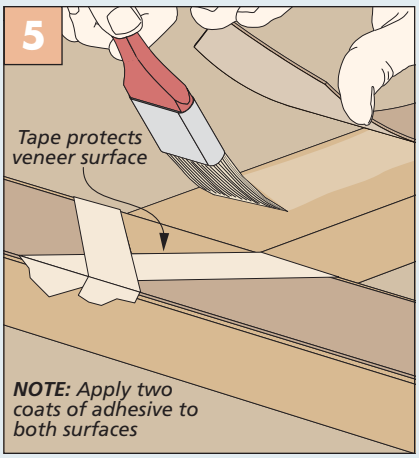

Glue Down Ends. Carefully spread adhesive on the remaining parts of the door frame and veneer.

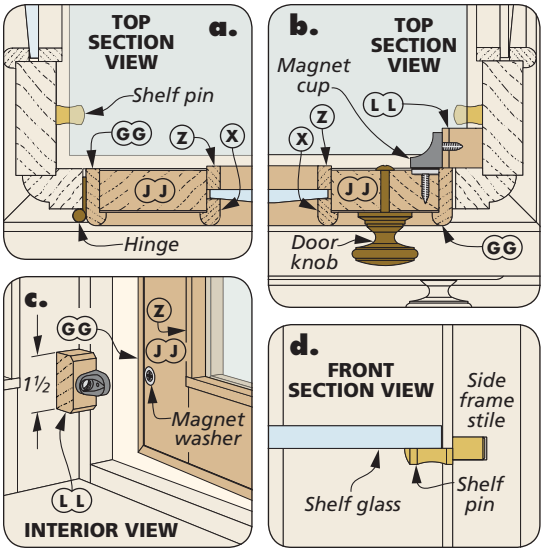

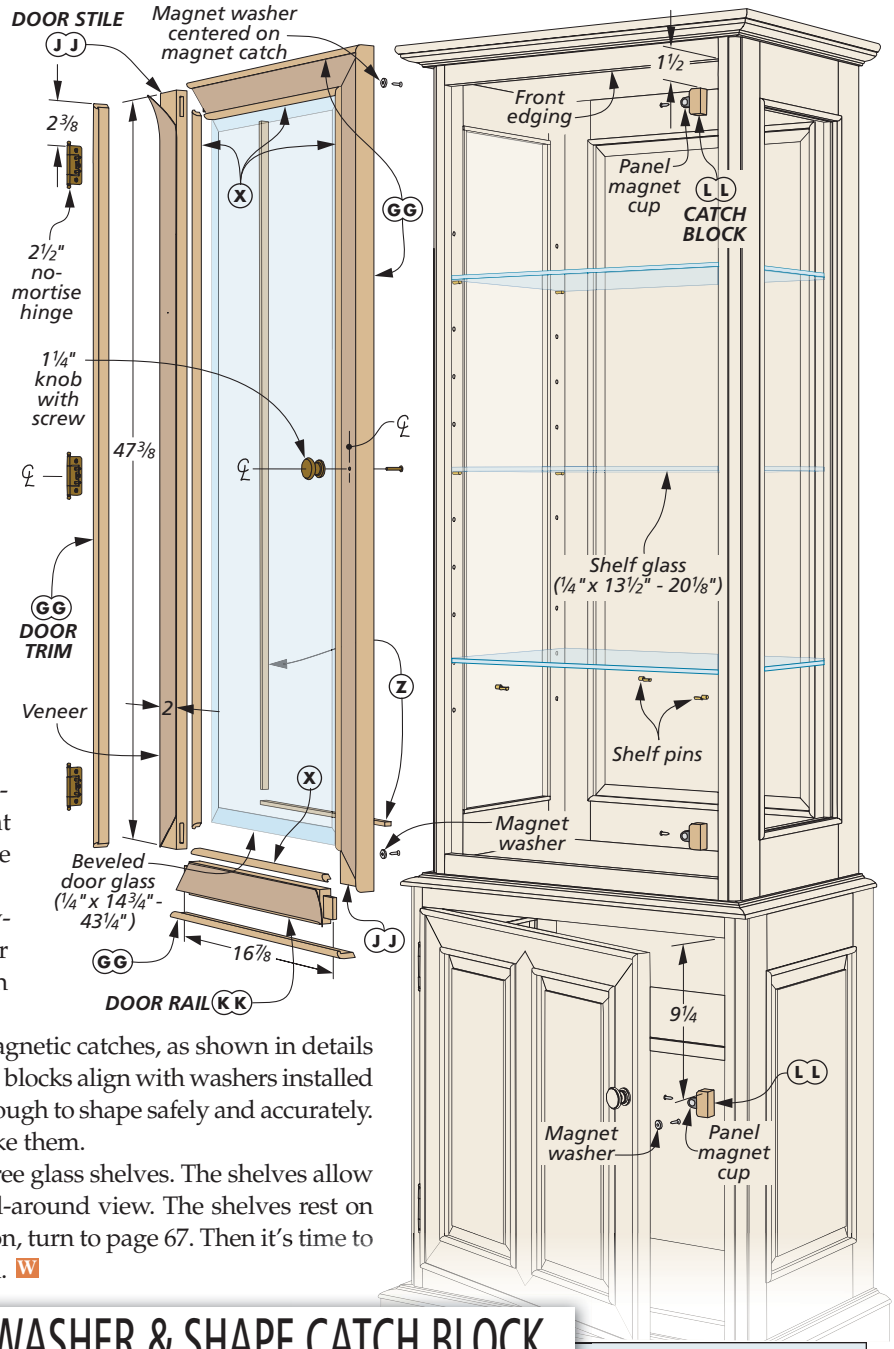

Completing the DISPLAY CASE

The remaining construction for the display cabinet involves making the upper door (drawing at right). And after the time and effort spent on the lower door, you'll find it goes faster.

ATTACHING THE DOOR. The upper door features a beveled glass panel like the sides. Due to the larger size and increased weight, I hung the door with three no-mortise hinges, as in detail 'a.'

To keep both doors closed, I made a set of magnetic catches, as shown in details 'b' and 'c.' The magnetic cup on these hardwood blocks align with washers installed in the doors. They're small parts, which can be tough to shape safely and accurately. The box below shows the process I used to make them.

GLASS SHELVES. Inside the case, objects rest on three glass shelves. The shelves allow more light inside the cabinet and permit an all-around view. The shelves rest on simple pins (detail 'd'). For finishing information, turn to page 67. Then it's time to display your handiwork — and your collection. W

How-To: DRILL FOR CATCH WASHER & SHAPE CATCH BLOCK

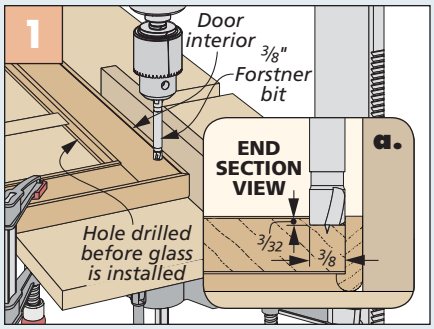

Install Magnet Washer. A Forstner bit is ideal for creating a shallow, flat-bottomed hole for the washer.

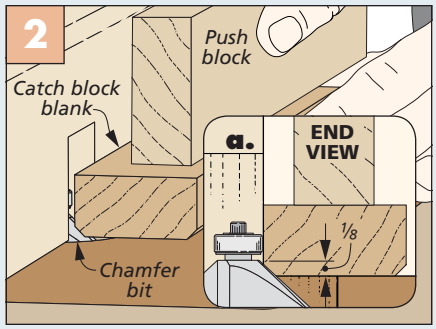

Rout a Chamfer. An extra-long block increases safety and control to create a slight chamfer on the catch blocks.

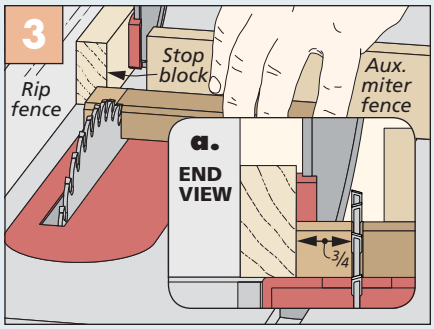

Cut to Length. A stop block on the rip fence ensures the blocks won't get trapped between the fence and blade.

Materials, Supplies & Cutting Diagram

A	Lower Front Stiles (2)	3/4 x 2 1/8 - 25
B	Lower Rear Stiles (2)	3/4 x 2 3/4 - 25
C	Lower Side Rails (4)	3/4 x 3 1/2 - 13
D	Lower Stile Edging (2)	3/4 x 1 1/4 - 25
E	Lower Top/Bottom (2)	3/4 ply. - 15 1/2 x 23
F	Lower Front Edging (2)	3/4 x 1 1/4 - 21 1/2
G	Upper Front Stiles (2)	3/4 x 2 1/8 - 50 1/2
H	Upper Rear Stiles (2)	3/4 x 2 3/4 - 50 1/2
I	Upper Side Rails (4)	3/4 x 3 1/2 - 12
J	Upper Stile Edging (2)	3/4 x 1 1/4 - 50 1/2
K	Upper Top/Bottom (2)	3/4 ply. - 14 x 21
L	Back Stiles (2)	3/4 x 2 1/2 - 50 1/2
M	Back Rails (2)	3/4 x 3 1/2 - 18 1/2
N	Upper Front Edging (2)	3/4 x 1 1/4 - 19 1/2
O	Front (1)	3/4 x 4 - 26 1/4
P	Sides (2)	3/4 x 4 - 17 5/8
Q	Backer (1)	3/4 x 3 7/8 - 24 3/4
R	Corner Block Blank	3/4 x 2 1/2 - 12 rgh.
S	Base Molding	3/4 x 2 - 63 rgh.
T	Lower Filler (1)	3/4 x 2 - 22 1/2
U	Upper Fillers (2)	3/4 x 2 - 19
V	Waist/Top Molding	3/4 x 2 3/4 - 120 rgh.
W	Bullnose Molding	1/2 x 2 - 60 rgh.
X	Bead Molding	3/8 x 1/2 - 675 rgh.
Y	Lower Panels (2)	1/2 x 10 7/8 - 17 7/8
Z	Stop	1/4 x 7/16 - 600 rgh.
AA	Lower Back (1)	1/4 ply. - 23 1/2 x 25
BB	Upper Back (1)	1/4 ply. - 16 1/2 x 43 1/2
CC	Lower Door Stiles (2)	3/4 x 2 - 21 7/8
DD	Lower Door Rails (2)	3/4 x 2 - 18 7/8
EE	Center Stile (1)	3/4 x 2 - 19 7/8
FF	Lower Door Panels (2)	1/2 x 7 5/16 - 17 3/4
GG	Door Trim	3/8 x 1 1/16 - 228 rgh.
HH	Shelf (1)	3/4 ply. - 15 x 22 3/8
II	Edging (1)	3/4 x 1/4 - 22 3/8
JJ	Upper Door Stiles (2)	3/4 x 2 - 47 3/8
KK	Upper Door Rails (2)	3/4 x 2 - 16 7/8
LL	Catch Blocks (2)	3/4 x 1 1/2 - 3/4

- (4) #8 x 1 1/4" Fh Woodscrews
- (2) 12mm Levelers w/Screws
- (8) #8 x 2" Fh Woodscrews
- (12) #6 x 3/4" Fh Woodscrews
- (2) 1/4" Glass - 9 7/8" x 43 3/8" (1" bevel)
- (1) 1/4" Mirror - 16 3/8" x 43 3/8" (1" bevel)
- (8) Retainer clips
- (12) #6 x 3/4" Fh Woodscrews
- (5) 2 1/2" No-mortise Hinges w/Screws
- (2) 1 1/4" Knobs w/Screws
- (16) 1/4" Shelf Pins
- (1) 1/4" Glass - 14 3/4" x 43 1/4" (1" bevel)
- (3) 1/4" Glass Shelves - 13 1/2" x 20 1/8"
- (3) Panel Magnet Cups
- (3) 3/8"-dia. Rare-Earth Magnets
- (3) #4 x 5/8" Fh Woodscrews
- (3) #6 x 1/2" Rh Woodscrews
- (3) Magnet Washers for 3/8"-dia. Magnets

3/4" x 6" - 96" Walnut (Two Boards @ 4.0 Bd. Ft. Each)

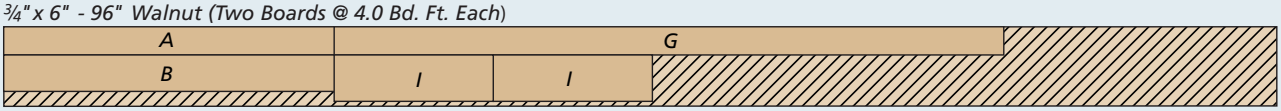

3/4" x 8" - 96" Walnut (Two Boards @ 5.3 Bd. Ft. Each)

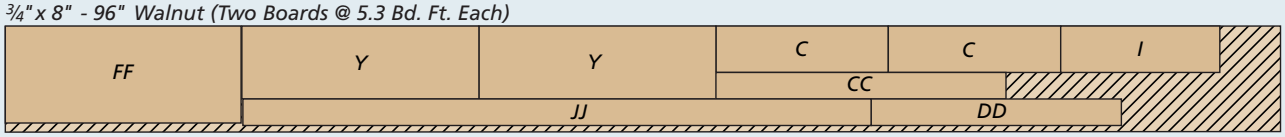

3/4" x 7" - 96" Walnut (Two Boards @ 4.7 Bd. Ft. Each)

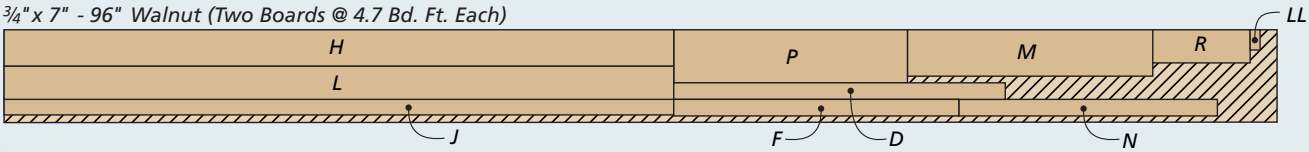

3/4" x 5" - 96" Walnut (3.3 Bd. Ft.)

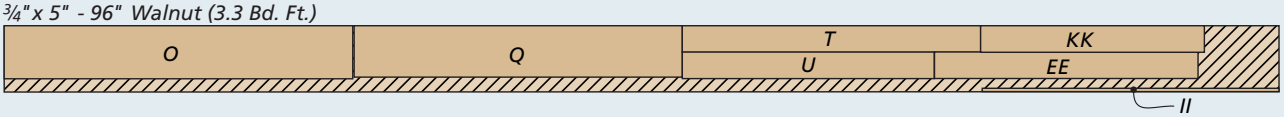

3/4" x 7" - 96" Walnut (4.7 Bd. Ft.)

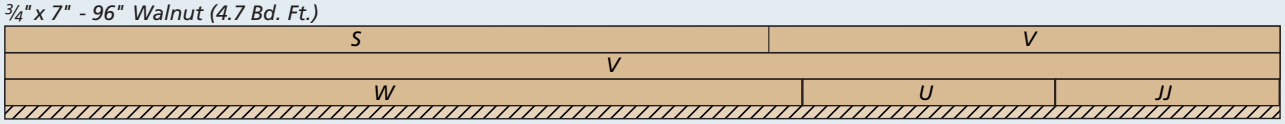

3/4" x 7" - 96" Walnut (4.7 Bd. Ft.)

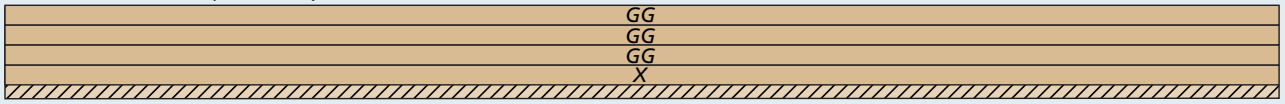

3/4" x 7" - 96" Walnut (Two Boards @ 4.7 Bd. Ft. Each)

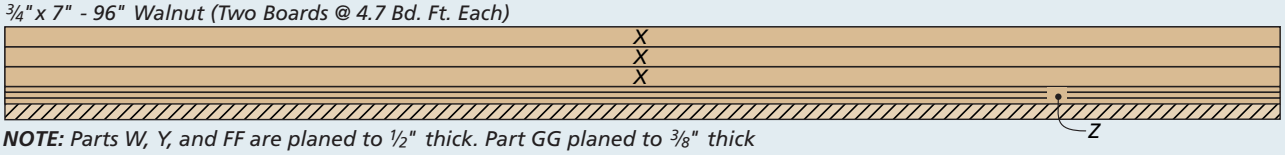

***NOTE:** Parts W, Y, and FF are planed to 1/2" thick. Part GG planed to 3/8" thick*

***ALSO NEEDED:** One 48" x 48" sheet of 3/4" walnut plywood, one 48" x 48" sheet of 1/4" walnut plywood, and one 24" x 96" sheet of paper-backed mahogany veneer*

great woodworking uses for your Circular Saw

When you think about using a circular saw, usually the first things that come to mind are jobsites and freshly framed stud walls. And while a circular saw is undoubtedly a construction tool, I find myself turning to it within my shop a surprising number of times. Its main use, of course, is breaking down sheet goods into smaller pieces. But I've found a few other tricks where it comes in handy for my everyday projects.

CUTTING UP BIG PANELS. Taking big pieces of plywood, MDF, and other sheet goods and turning them into more manageable sizes is your best bet for getting some good mileage out of a circular saw in your shop. It can be difficult to lift and cut a sheet of plywood

▲ Blades with more teeth will yield a cleaner cut for woodworking tasks. Several options are available.

▲ If you don't want to deal with an elaborate sawhorse and 2x4 setup, simply cut your sheet goods on the floor on top of a sheet of foam insulation. The foam supports the bottom of the cut for cleaner results, plus you don't have to lift the heavy sheet up onto sawhorses.

on the table saw by yourself, so breaking the sheets down with a circular saw first just makes sense.

To get the best results possible, I suggest adding a few tips and tricks to your sheet breakdown routine before you get started. First, if you want to make cleaner cuts, consider upgrading to a higher-quality 40-tooth or 60-tooth blade. The two blades shown in the lower left photo on the previous page are great choices, but there are plenty of options out there at home centers and hardware stores.

Second, you'll want to support the sheet with more than just sawhorses to keep the pieces from falling. This doesn't have to be an elaborate setup. I find that a few 2x4s spanning the sawhorses fits the bill here. You can also lay the sheet on a piece of foam insulation and cut it on the floor (photos, previous page).

Finally, if you want to make accurate cuts, some kind of straightedge guide is a must. You can purchase an aluminum guide that clamps onto your workpiece (previous page), or make your own with a hardboard base and a plywood fence like in the top right photo. By trimming along the fence with your circular saw, you can create an edge on the base that lines right up with your cutline.

TAPERS. Making a long taper on a piece at the band saw or table saw can be a bit tricky, particularly if you're working with a big piece of material. As long as the workpiece is wide enough, you can do it with a circular saw. All you have to do is skew the straightedge guide you're using to match the taper angle. Then clamp it securely in place before making the cut, as shown in the top photo.

▲ A long taper on a piece of plywood or a wide board can be a cumbersome task at the table saw or band saw. With a good straightedge guide and careful layout, the circular saw handles the task with ease without straining your back in the process.

▲ Plunge cuts make a circular saw useful for clean-cut openings. Just use care as you hold back the guard and lower the saw.

▲ Large corner notches are child's play for a circular saw. Stop short of the corners, so you can finish things up with a hand saw.

OPENINGS & NOTCHES. If you have a large opening in the middle of a panel (think a cutout for a bar sink), a circular saw will form cleaner edges than a jigsaw. You make a plunge cut by lifting the guard, turning on the saw, and carefully lowering it into the material at the cut line. Then just trim to the corner, and repeat. You'll need to use a hand saw or jigsaw to complete the corners. Corner notches can be formed in a similar fashion, but the process is even easier. The middle photos provide some examples.

DADOES. When working with longer boards like cedar or pine for outdoor projects, a circular saw is also useful for forming dadoes on pieces that you don't want to cut at the table saw. To do this, just guide the saw with a square as you make a series of kerfs to form the shoulders of the dado, as well as remove the bulk of the center waste. A few cuts with a sharp chisel complete the dado (refer to the photos at left).

Don't disregard the circular saw as a viable woodworking tool. You might just come up with some of your own great uses for this workhorse. W

▲ After wasting out the field of the dado with a series of saw kerfs (above), a little bit of work with a sharp chisel will handle the rest (right).

better projects with Pre-Made Molding

Here in the *Woodsmith* shop, we obviously like to create our own molding and trim profiles on boards whenever possible. Even if the profile gets elaborate, well, that just makes a better story when the project is complete.

However, I will admit that every now and then, I might simplify the project construction process if the right piece of pre-made molding catches my eye. And with the wide range of pre-made moldings now available, there's no reason not to take advantage of these possibilities when you can, particularly if they can save you some time and money on your woodworking projects.

▲ This painted display cabinet seamlessly incorporated pre-made crown molding as a decorative element below the top panel.

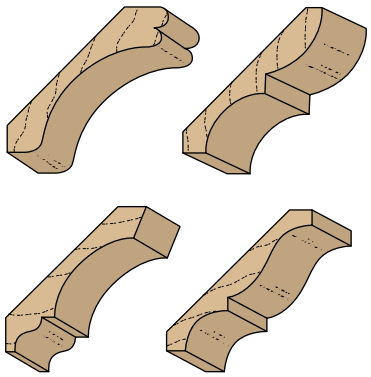

Crown Molding

WHY PRE-MADE MOLDING? There are a few reasons why you might forego the shaping process and choose a piece with the profile already completed on it. Sometimes creating it on your own can prove to be a difficult and time-consuming process. For example, part of the process of making crown molding requires an unusual table saw setup, passing the board at an angle over the blade multiple times. Cutting the dentil molding on the following page is a similar process to box joints, but the pieces are usually much longer.

Now, it's not a matter of lacking the skill to perform these tasks. It's just that sometimes I want to wrap a project up in an efficient manner so that I can move on to the next one more quickly.

Other times, the reasons that I choose pre-made moldings involve sheer economics. For example, if I want to add a piece of base molding with an ornate profile to the bottom of a bookcase, it might cost more to buy the router bit to make the molding than it would cost to buy the molding itself. You can see where I'm going here. It just makes sense for my woodworking budget.

The best part is that many of the moldings available today come in a wide range of species to match your project, from cherry to maple to oak and more. As you can see in the main photo on the previous page, some even come pre-finished or pre-primed, which can simplify finishing or painting your project later on.

Another benefit of pre-made moldings is that you'll often find moldings that match specific furniture styles, such as Craftsman, Victorian, and others.

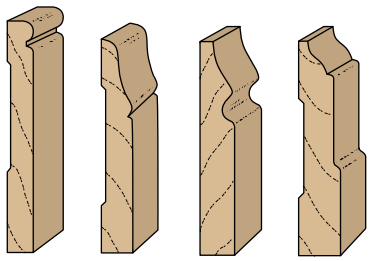

Base Molding

▲ Base molding is often used to beef up the bottom of a bookcase or cabinet. This one features a simple beaded profile.

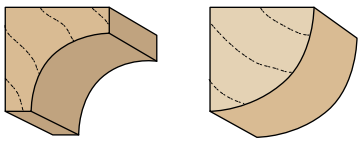

Cove & Quarter Round Molding

Plus, you'll find crown, base, and other moldings in these styles that pair well with each other. Many molding options are available at home centers, and you'll find even more in a greater number of species at specialty millwork suppliers like *U.S. Building Products* (Sources, page 67). Here are a few ways to incorporate pre-made moldings into your projects.

CROWN MOLDING

Crown molding is one of the most common project areas to rely on a pre-made molding. You'll find a lot of unique profiles that would be difficult to make on your own. The drawings on the previous page provide a few examples of what's available.

COVE MOLDING OR QUARTER ROUND

The smaller cove and quarter round moldings are available in a variety of sizes and species. Cove molding just has a small circular profile in the middle of a small molding, while quarter round is a piece with a full roundover along one edge. They're great for forming the transition from one area to another on a piece of furniture (photo above).

▲ Dentil molding can be a challenge to knock out at the table saw, but several options are available for purchase.

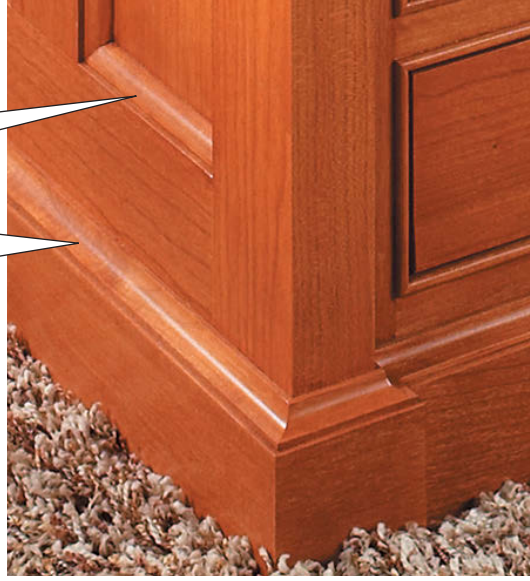

▲ The smaller cove and quarter round moldings aren't difficult to make, but they're also inexpensive to buy pre-made.

DENTIL MOLDING

Dentil molding, which is characterized by a series of notches along the length of a piece to give the illusion of many blocks, is another tricky molding to make on your own. Fortunately, there are several options available. Dentil molding is great for dressing out the top of a cabinet or bookcase (below).

BASE MOLDING

Base molding is usually thought of as more of a room element than a furniture part, but some bigger cabinetry, bookcases, or built-ins feature base molding as part of the design. Base molding frequently showcases elaborate profiles that would require an expensive router bit to duplicate. Instead, simply choose from among the many options available (far left drawings and photo).

So don't be afraid to try pre-made moldings in your upcoming projects. Anyone admiring your work will never even know you used it. W

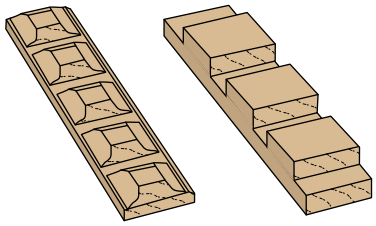

Dentil Molding

10 must-have hand tools for Starting a Shop

Starting your woodworking adventure is a thrill indeed. But unless you've inherited a shop, have a rich uncle, or won the lottery, putting together a good set of tools takes time and a little planning.

The whole thing starts with defining your goals as a woodworker. What are you planning on building? From there, you can prioritize your purchases. Regardless of the path you take as a woodworker, good hand tools that will last a lifetime are the best place to start. The list of tools shown here is based on the opinions and experience of the woodworkers on our staff.

[1] Tape Measure

You don't need a big, long tape to use in a woodworking shop. Most of the time, a 12' tape measure will do. But you do want a high-quality one, as shown in the photo near right.

A high-quality tape consists of several things: A thick blade with crisply printed markings that are easy to read, for starters. Also, the hook at the end of the blade should be the moveable type that's designed to read inside and outside measurements accurately.

[2] 6" & 12" Steel Rules

For precise marking and measuring, a good steel rule, like the 6" version peeking out of the shop apron in the lower left photo, will end up being the tool that you turn to time and time again. You'll also want a 12" rule to use at the bench. Just make sure that they're both hardened steel with a non-glare finish and acid-etched markings.

[3] Marking Gauge

A marking gauge is a time-tested layout tool that makes a sharp and clear scribed line that's the first step to creating hand-cut joinery. When you want to start a cut in an exact spot, the fine slice that the marking gauge makes will give you a groove for the tool to track in. The photo below shows just that.

[4] Wood Mallet

A wood mallet is an essential tool for use with a sharp chisel (upper left photo, on the next page). It's also great for persuading stubborn parts together. There are several varieties of mallets, but the one shown here is a good first choice.

▲ The compact size of this tape measure fits nicely in the shop apron, along with a very handy 6" steel rule.

▲ Crisp, clean, and accurate layouts are easy with a quality marking gauge. A series of light passes will ensure good results.

The dynamic duo of a wood mallet and a good set of sharp butt chisels makes it easy to go on the journey of hand-cut mortises.

You can't go wrong with selecting these two planes when building a set of woodworking tools. Use the block plane for daily tasks (left) and the shoulder plane for joinery (right).

[5] Chisel Set

Chisels fall into the family of "you can never have enough of them" tools. But for starters, a good set of butt chisels that range from a ¼" to 1" wide will handle most tasks, from chopping mortises to pairing dovetails.

[6] Combination Square

A quality combination square (photo below) is a must-have in any shop. Beyond the basics of checking the ends of workpieces for square and making 90° and 45° layout lines, it can also be used to set blade and bit heights. It makes finding the center of material a breeze, as well as confirming the depths of mortises. Again, quality matters. Shop for a square that has a machined cast-iron head. As for the blade, it should be hardened steel with the markings etched (not stamped) into the surface.

[7] Scratch Awl

The basic scratch awl is a tool that resembles a turbo-charged pencil. It's great for marking lines in wood or even brass and aluminum, as the photo lower left shows. The positive score mark that it makes is great for registering cuts with a saw or chisel. When used with a mallet, it's a perfect tool for dimpling, marking locations for pilot holes.

[8] Block Plane

When I think of the block plane, it reminds me of the children's story, *The Little Engine That Could*. A block plane is great for cleaning up tearout, removing saw marks, or chamfering tenons. It also softens the edges of a workpiece with a chamfer or roundover. There are some real fancy ones out there if they're in your budget. But the solid, *Stanley* model in the middle photo above is worth consideration, as well.

[9] Shoulder Plane

The shoulder plane may seem to be the most exotic tool in this lineup. But when it comes to starting a woodworking journey, learning how to make good, solid joints is one of the best confidence-builders a beginner can have. Because the plane iron runs the width of the plane, it allows you to trim a tenon or rabbet for a perfect fit. This helps you create tight-fitting joinery quickly and easily.

[10] Saws

The last item on our list is actually two tools. First is the Japanese saw in the photo below. This type of saw is called a *Ryoba*. It has rip and crosscut teeth on opposite sides of the blade. It's a very sharp, versatile saw. Also shown is a back saw. This western-style saw has a rib that stiffens the blade making it ideal for cutting miters and dovetails. W

Here, the tag team of the combination square and a scratch awl makes easy work of marking aluminum. The awl also comes in handy for marking centerpoints for drilling holes in wood and metal.

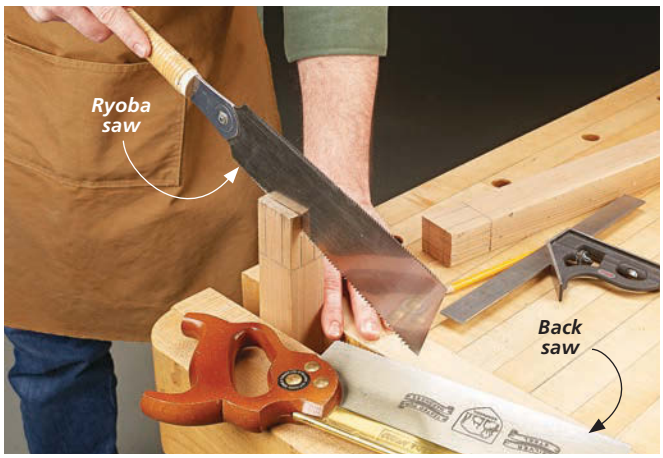

These two hand saws can cover many woodworking bases for a long time. The Japanese *Ryoba* saw has rip teeth on one side and crosscut on the other. The back saw is ideal for cutting tenons and dovetails.

woodworking with a Portable Saw

If you have a small shop or a limited budget, a portable saw can be an excellent entry into the table saw world. These compact saws, formerly known as benchtop saws, and sometimes labeled as jobsite saws, are like scaled-down versions of contractor saws but with a smaller footprint and price tag.

I'll admit that I hadn't looked closely at these types of saws for a while, and I was surprised by some of the features on the newer saws. Many have handy additions like pull-out extension wings and souped-up motors that increase their capacity and power. And most are available with folding stands that make them easy to move around or store.

But what I was mainly curious about is if these saws have what it takes to do "real" woodworking. You know what I mean — ripping thick boards, cutting dadoes and rabbets, and wrangling sheet goods. To find out for sure, I performed several common operations on a portable saw to see if it was up to the task. The saw I used was a *Bosch TS3000*, but other manufacturers make portable saws with similar specs.

▲ Most portable table saws have a short arbor that limits the width of the dado that you can create with the saw.

▲ The saw had plenty of power to run a ½"-wide dado blade at full speed. I added a zero-clearance insert for a safer cut.

CUTTING THICK HARDWOOD. One limitation when it comes to woodworking with a portable table saw is power. Since they often have a smaller, universal motor, I was concerned they might bog down in thicker stock. However, I found that wasn't the case at all. I passed piece after

▲ Pull-out extension wings increase the capacity of a portable table saw for cutting sheet goods. The rip fence travels with the pull-out wing on one side for making wider rip cuts.

▲ Even with the extension wings, the smaller scale of portable table saws requires extra support when breaking down large sheet goods. But the saws are definitely up to the task.

piece of thick maple through the blade, and the saw never bogged down. As it turns out, most of the newer portable saws have 15-amp motors that provide plenty of power for cutting hardwoods.

RABBETS, DADOES & GROOVES. Another important task you can do with a full-size saw is equip it with a dado blade for cutting rabbets, dadoes, and grooves. Here, I was worried about a couple of factors — power and arbor length.

As with the thick stock I had ripped earlier, power didn't seem to be an issue for cutting dadoes. But the short arbor length on most of these portable saws does limit you to cutting a ½"-wide dado (lower photos, previous page). At least one portable saw boasts a longer arbor for cutting a full ¾"-wide dado.

FENCES & SLEDS. I like to use sleds and auxiliary fences on my table saw for crosscuts and miters. It turns out auxiliary fences really aren't an issue. They seem to work just as well on a portable saw as on a regular saw. Plus, most of these saws come equipped with a standard-size miter gauge and slots.

When it comes to sleds, though, you'll need to take into account the smaller size of the saw table on a portable saw. I came up with the compact design shown in the box below for my saw.

SUPPORT. When cutting long or wide boards or sheet goods, infeed, outfeed, and side support is an important consideration for all table saws. But it's especially critical due to the smaller table size on a portable saw.

Luckily, most of the saws have pull-out wings that increase the capacity on both sides of the saw. But it's still a good idea to use roller stands or other support for sheet goods (above) or long stock (main photo on the previous page).

If you're in the market for your first table saw, or just need a second one that's easy to transport, the newer portable saws are up to the task. W

Great Add-Ons: WORKSTATION & SLED

If you want to make a portable table saw a more permanent fixture in your shop, the handy stand shown below is worth a closer look. It features outfeed and side support, a more stable base for all your cuts, and built-in storage. Full plans for the stand are available at *WoodsmithPlans.com* (#SN13518).

CROSSCUT SLED. When it comes to using a sled for accurate crosscuts and miters, the same concepts apply to a portable table saw as for a larger saw. The main consideration is scaling the sled down for the smaller table size. I came up with the sled shown at right to make clean, accurate, and repeatable crosscuts. You'll want to position the sled where you'd like it on the saw table before adding the runner. The first cut you make with the sled will form the saw kerf.

◄ This handy stand enhances the utility of a portable saw, making it a permanent shop fixture.

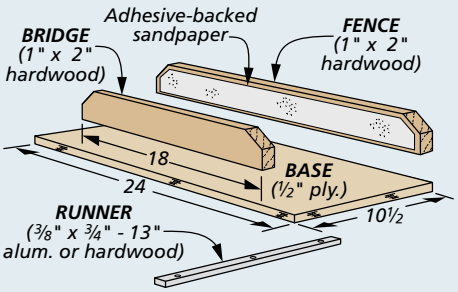

▲ By scaling down a crosscut sled to match the smaller saw table, you can use the concept for accurate, repeatable crosscuts.

tips from our shop

Shop Notes

Angled Dado Jig

The garden tower (page 28) has mirror-image legs with a series of angled dadoes along their lengths. These dadoes hold lattice strips that form the tower's unique "herringbone" design.

Each dado is 1" wide, and there are six of them in each leg. It would be a challenge to cut them at the table saw without multiple setups for each dado. So I devised a pair of mirror-image jigs to use in conjunction with my router.

JIG DETAILS. One jig does all the dadoes on the left legs, and the other handles the right legs. The jig works with a dado cleanout bit to allow you to form three of the dadoes without repositioning the jig. Figure 1 shows the position for the first set of dadoes. Then, you simply align the edge of the fence with the shoulder of the uppermost dado to rout the next three (refer to Figure 2).

JIG CONSTRUCTION. The basic construction of the jig is shown in the left drawing below. As you can see, there isn't much to it: Two cleats straddle the leg and four fences guide the bearing of the router bit. The fences are sized to match the dado spacing, and the openings between the fences match the dadoes. The main consideration is getting the angles of the fences correct before screwing the fences to the cleats (detail 'a').

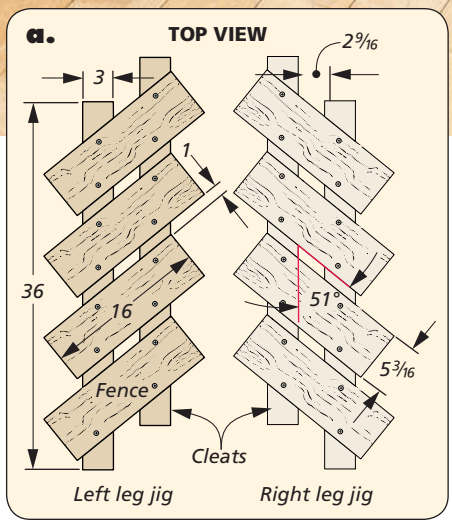

QUICK TIP. As you begin to use the jig to rout the dadoes, keep in mind that you'll cut partially into the cleats with your first set of passes. After that, though, routing the dadoes is smooth sailing.

How-To: BUILD & USE THE JIG

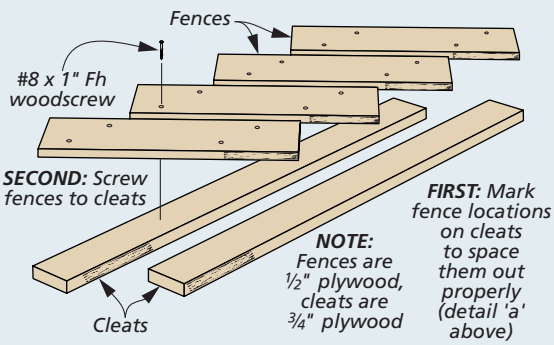

Jig Assembly. Lay out the fence locations before screwing them to the cleats. Use 1"-wide spacers to position the fences for installation.

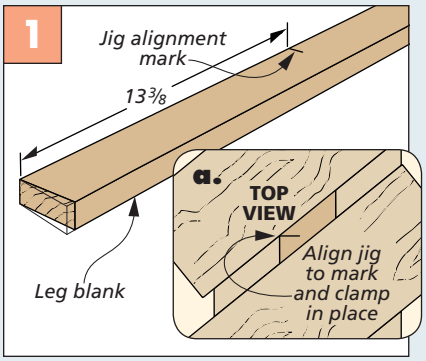

First Pass. Mark the leg to align the jig for the first set of dadoes. Then clamp it on and start routing.

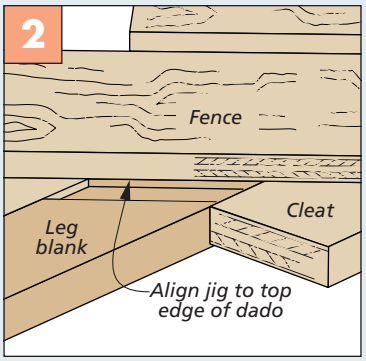

Second Pass. Align the bottom fence with the top shoulder for the second set of dadoes.

Long Taper Jig

The legs of the garden tower (page 28) have a long, subtle taper along their entire length. You could attempt to make this cut at the band saw, but it can be difficult to get smooth, consistent results when cutting a taper of this length.

Instead, I chose to build this super-sized jig to cut the tapers at the table saw. It has a base that rides between the rip fence and the blade, and a pair of cleats to position the leg and hold it at the correct angle to the blade for the taper. Three toggle clamps secure the leg so that it won't shift around during the cut. After cutting the parts to size, secure the cleat to the base with glue and screws. The precise location of the toggle clamps isn't critical.

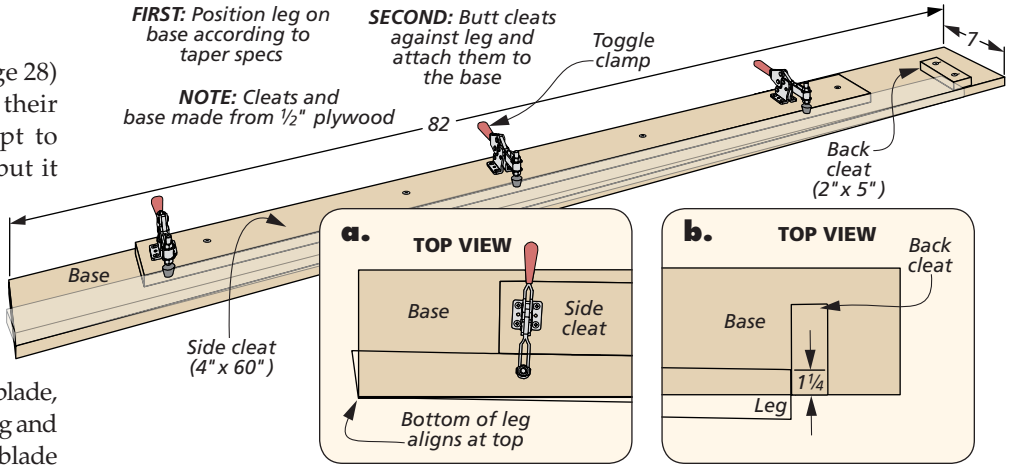

USING THE JIG. Once it's built, cutting the tapers is fairly simple. You just set the rip fence so the base passes between it and the blade, then clamp the leg in position. Just keep in mind that you'll cut the left leg with the angled dadoes facing up, and the right leg with the angled dadoes facing down in order to create the mirror-image pairs needed to build the garden tower.

Angled Wide Dado Jig

The last jig needed for the garden tower is the dado jig shown at right. It's used to rout the wide dadoes in the legs that accept the rails. It's built similarly to the jig on page 64, but it has just one, wide opening between the two fences. Once again, you'll use it with a dado clean-out bit to form the dadoes. As before, you'll need to build two jigs that are mirror images of one another: One for the left legs and one for the right. The steps for assembling and using the jig are similar to those of the dado jigs shown on the previous page.

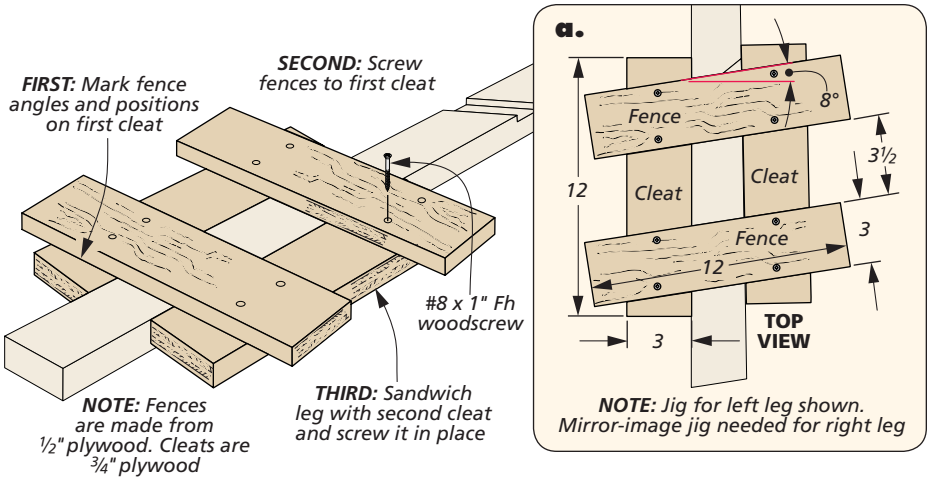

Spline Kerf Cradle

I used hardwood splines to reinforce the mitered corners of the scalloped-lid box on page 18. To safely cut the spline kerfs in the lid and box corners at the table saw requires the assistance of a cradle.

QUICK CONSTRUCTION. In order to keep the build time to a minimum, I opted for the simple design you see here. It consists of a tall plywood fence that you push along the table saw rip fence. Cleats made from "two-by" stock cradle both the box and lid. The cleats can simply be glued to the fence.

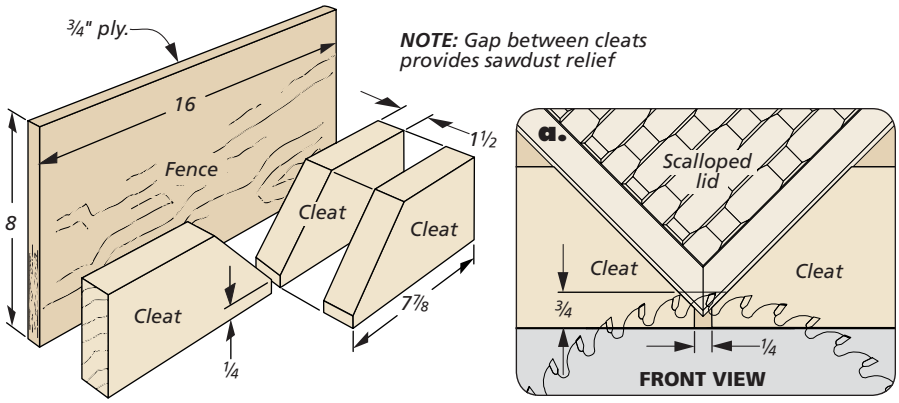

EASY TO SET UP. The idea here is pretty straightforward. After marking the kerf locations on the workpieces, position the lid so it's cradled by the cleats, as shown in detail 'a.' You can then set the table saw rip fence to line up with the first kerf mark. Now push the cradle through the blade, cutting through the cleats and lid to make the first kerf. Then rotate the workpiece and cut the kerf in the next corner. For the box, you can cut the upper and lower kerfs from one fence position before readjusting the fence and cutting the two middle kerfs.

Sled for Ripping Beveled Box Corners

After assembling the storage boxes (page 39), I beveled the thick hardwood corners on each box to remove the sharp edges. I found that the easiest way to do this was to make a sled that attaches to my miter gauge. As you can see in the drawing below, the sled construction is pretty straightforward. All it takes is two pieces of MDF and a plywood stop to align the box to the saw blade. I assembled the base and fence with a few screws, being mindful of the path of the blade.

ALIGNMENT KERF. After screwing the body of the jig to the miter gauge, I set the table saw blade to 45° and made an initial pass through the jig base to establish the kerf.

ADD THE STOP. Next, as detail 'a' shows, I placed one of the boxes on the jig and aligned the layout mark on the box corner to the saw kerf in the jig base. Then I screwed the stop in place on the jig as close as possible to the lower corner plate (detail 'b'). After each pass, I rotated the box to make the next cut. Once all of the cuts were complete, I sanded out any blade or burn marks that were left behind on the hardwood box corners.

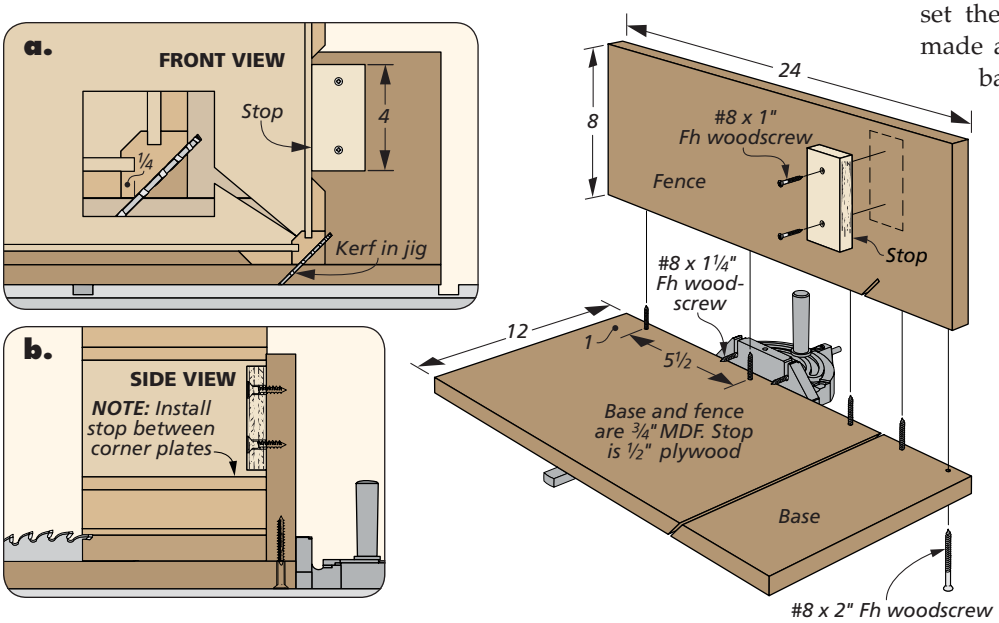

Storage Box Pocket Template

The pocket in the lid of the storage box on page 41 requires a little upfront work. You'll need a simple template, a jig saw, and your router table.

The template in the drawing to the right is a piece of MDF with a notch on one long edge. This notch mates up with the latch plate you've already installed on the lid.

ROUGH CUT. The first order of business is to remove the bulk of the waste in the center area of the pocket. After laying out the pocket location on the lid using the template, set the lid on some scraps to provide clearance for the latch plate. Drill a starter hole and then cut away most of the pocket waste material, as shown in Figure 1.

CLEAN IT UP. Now, align the template to the upside down lid. I used some double-sided tape to temporarily secure the two pieces. Using the template to guide the bearing of a flush-trim bit, clean up the lid opening (Figure 2). Once this is done, I switched to a roundover bit and softened the outer edge of the pocket. After the template and tape is off the lid, sand out any burn marks. The lid is now ready for the box. W

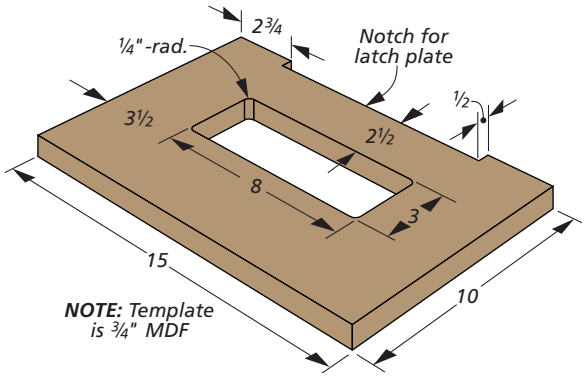

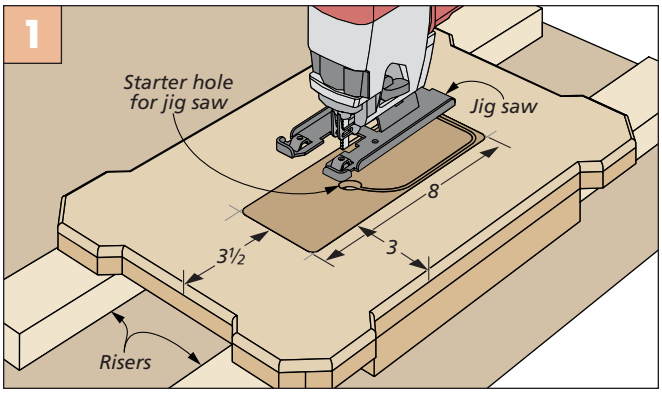

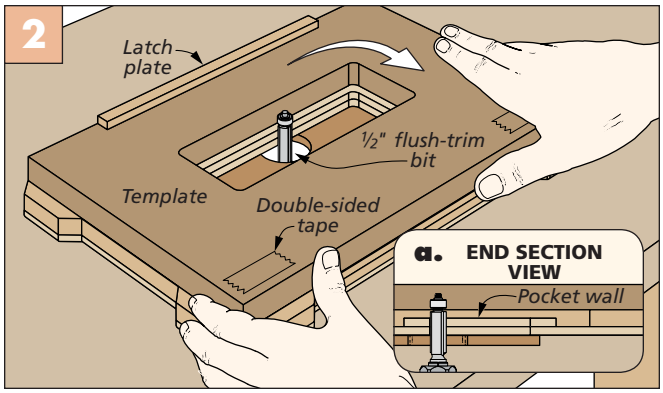

hardware & supplies
Sources

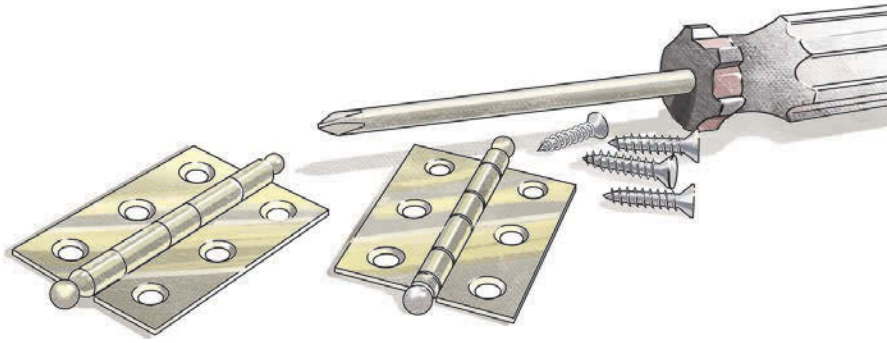

Most of the materials and supplies you'll need to build the projects are available at hardware stores or home centers. For specific products or hard-to-find items, take a look at the sources listed here. You'll find each part number listed by the company name. See the right margin for contact information.

LOOSE TENON JOINERY *(p.12)*

- **MSC Direct**
  5/16" End Mill Bit 05376041
- **Woodcraft**
  8mm Collet Adapter 125110
  8mm x 50mm Dominos . . 494941
  8mm x 40mm Dominos . . 494940

STOCK HOLD-DOWNS *(p.14)*

The *JessEm Stock Guides* for the table saw and router table are available directly from *JessEm Tool Company*, or from several online retailers, including *Infinity Cutting Tools* and *Amazon*.

SCALLOPED-LID BOX *(p.18)*

- **Lee Valley**
  1/8" Hinge Pin Set 05H02.01
  Mag. Touch Latch 00W02.06

To finish the box, I sprayed it with two coats of clear lacquer before applying the adhesive-backed felt sheets purchased from a local craft store.

BRASS HAMMERS *(p.24)*

- **McMaster-Carr**
  1¼" Brass 8951K53
  1½" Brass 8951K55
- **Rockler**
  Darkening Solution 73808

Before applying the darkening solution to the brass hammer head, be sure to sand the surface with 400-grit sandpaper. Follow the manufacturer's instructions on the label when applying the darkening solution. When it was dry, I scuffed up the corners with a *Scotch-Brite* pad to add to the "aged" look.

GARDEN TOWER *(p.28)*

The garden tower was stained with two coats of *Penofin Ultra Premium Penetrating Oil Finish* in "Transparent Cedar."

STORAGE BOXES *(p.36)*

- **McMaster-Carr**
  Handles 11905A12
  Continuous Hinges 1608A43
  Box Latches 1794A41
  2½" Casters 78155T15
- **Rockler**
  12" Drawer Slides 38244

The storage boxes and cases were finished with a couple coats of clear flat-sheen lacquer.

DISPLAY CABINET *(p.44)*

- **Amana Tool**
  Table Edge Bit 49560
  Raised Panel Bit 54133
- **Lee Valley**
  Retainer Clips 00S07.03
  1¼" Knobs 01W38.10
  Hinges 02H12.22
  Shelf Supports 05H20.01
  Levelers 01S19.05
  Panel Mag. Cups 99K32.72
  Rare-Earth Magnets . . . 99K32.03
  Magnet Washers 99K32.62
- **Veneer Supplies**
  Veneer PBMAHRS28

When purchasing the ribbon stripe mahogany veneer, select the 10-mil paper backing without adhesive. The cabinet was sprayed with two coats of satin sheen lacquer and one coat of flat-sheen lacquer.

PRE-MADE MOLDINGS *(p.58)*

Pre-made moldings are available at many home centers. You can also buy *Ferche* moldings online at *U.S. Building Products*.

ESSENTIAL HAND TOOLS *(p.60)*

Most of the tools shown in the article are available at your local home center or through woodworking retailers such as *Lee Valley*, *Woodcraft*, and *Rockler*.

The Complete *Woodsmith* Magazine Collection *1979 to 2016*

✓ Access Every Issue, Article, Photo, and Illustration Ever Published!
✓ Every Plan, Tip, and Technique, Everything You'll Ever Need!
✓ Instant Online Access on Your Computer, Laptop, Tablet — Even a Smart Phone!

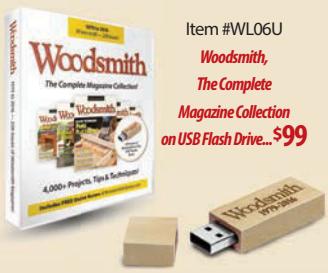

Item #WL06U
Woodsmith, The Complete Magazine Collection on USB Flash Drive... $99

MAIL ORDER SOURCES

Project supplies may be ordered from the following companies:

Amana Tool
800-445-0077
amanatool.com

amazon.com

Infinity Cutting Tools
877-872-2487
infinitytools.com

JessEm Tool Company
866-272-7492
jessemdirect.com

Lee Valley
800-871-8158
leevalley.com

McMaster-Carr
630-833-0300
mcmaster.com

MSC Direct
800-645-7270
mscdirect.com

Penofin
800-736-6346
penofin.com

Rockler
800-279-4441
rockler.com

U.S. Building Products
800-284-5194
usbuildingproducts.com

Veneer Supplies
veneersupplies.com

Woodcraft
800-225-1153
woodcraft.com

looking inside
Final Details

▲ *Brass Hammers.* While small in hand, these attractive brass hammers pack a serious punch. We'll show you how to make a set in your own shop, beginning on page 24.

◄ *Scalloped-Lid Box.* Concealed hinge pins and a magnetic touch latch keep the hardware hidden on this handsome box. You can find plans on page 18.

Display Cabinet. With glass shelves and a mirrored back, this cabinet will display any collection in style. Turn to page 44 for step-by-step plans. ►

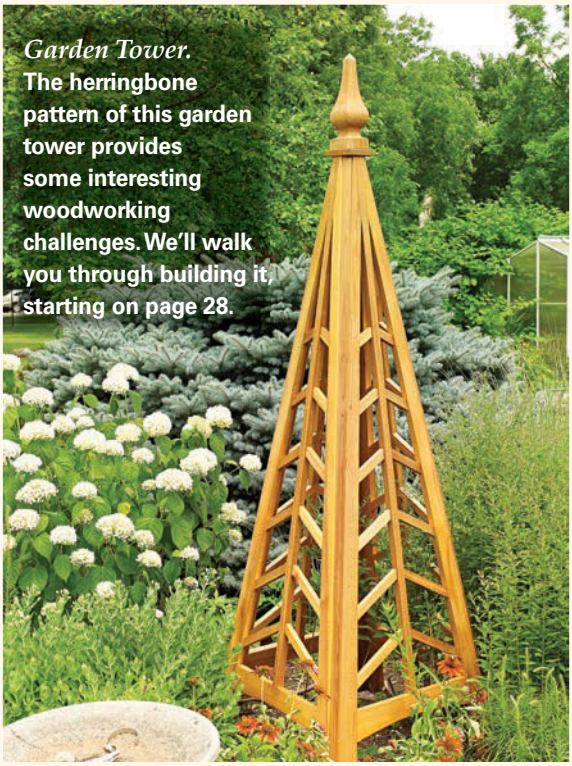

Garden Tower. The herringbone pattern of this garden tower provides some interesting woodworking challenges. We'll walk you through building it, starting on page 28.

▲ *Modular Storage Boxes.* With three different sizes to choose from, these modular boxes will handle all your tool storage needs. And they fit neatly in a roll-around cabinet. Learn more about building them starting on page 36.